Operation, Repair, Parts

SURE STRIPE 3350SP

Airless Line Striper

3A4637F
EN

For the application of line striping materials. For professional use only. For outdoor use only. Not approved for use in explosive atmospheres or hazardous locations.

Model: 25M232
3300 psi (22.8 MPa, 228 bar) Maximum Operating Pressure

Important Safety Instructions

Read all warnings and instructions in this manual, related manuals, and on the equipment. Be familiar with the controls and the proper usage of the equipment. Save these instructions.

Related Manuals:	
3A4408	Gun
3A4347	Pump

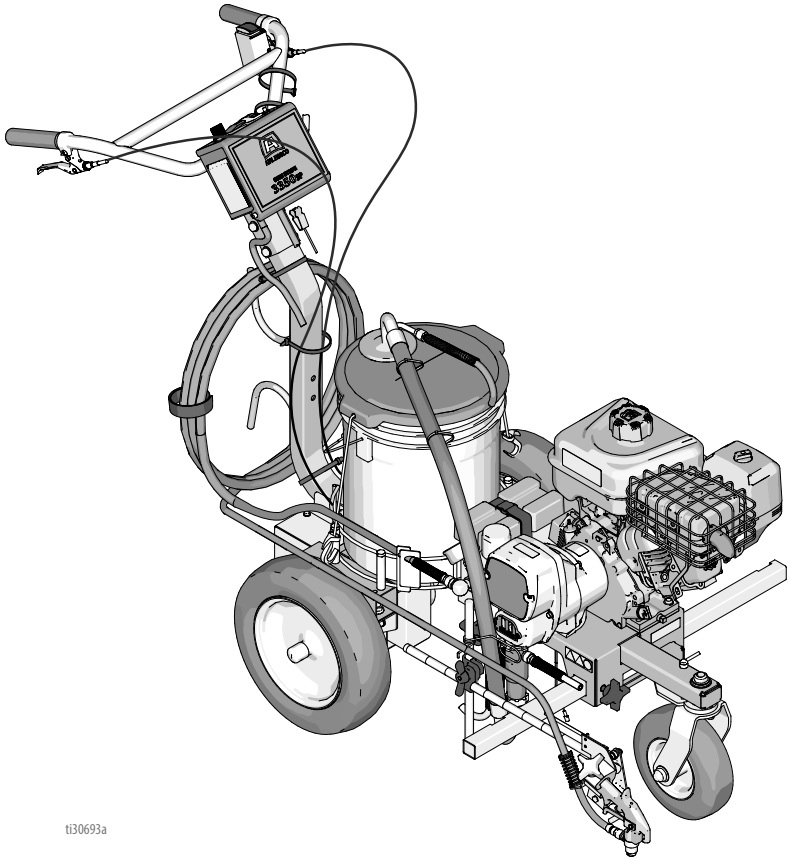

Contents

Warnings . . . 3
Uni-Tip Selection . . . 6
Component Identification . . . 7
Grounding Procedure (For Flammable Materials Only) . . . 8
Pressure Relief Procedure . . . 8
Maintenance . . . 9
Front Wheel Alignment: . . . 9
Operation . . . 10
Setup . . . 10
Self-Propelled Drive . . . 11
Power ON/OFF . . . 11
Drive Control . . . 12
Speed Adjustment . . . 12
Speed Control . . . 12
Startup . . . 13
Uni-Tip and Guard Assembly . . . 16
Gun Placement . . . 17
Install Gun . . . 17
Position Gun . . . 17
Paint Stripe Width . . . 19
Spray Test Stripe . . . 19
Clearing Tip Clogs . . . 19
Clean-up . . . 20
Flushing Recommendations . . . 23
Troubleshooting . . . 24
Displacement Pump . . . 26
Removal . . . 26
Repair . . . 26
Installation . . . 27
Drive Housing and Connecting Rod . . . 28
Removal . . . 28
Installation . . . 28
Pinion Assembly/Clutch Armature/Clamp . . . 29
Pinion Assembly/Clutch Armature Removal . . . 29
Installation . . . 30
Clamp Removal . . . 31
Clamp Installation . . . 31
Clutch Housing . . . 32
Removal . . . 32
Installation . . . 32
Engine . . . 33
Removal . . . 33
Installation . . . 33
Pressure Control Transducer . . . 34
Removal . . . 34
Installation . . . 34
Pressure Control (On/Off Switch) . . . 35
Removal . . . 35
Installation . . . 35
Pressure Adjust Potentiometer . . . 36
Removal . . . 36
Installation . . . 36
Control Board . . . 36
Removal . . . 36
Installation . . . 36
Battery . . . 37
Removal . . . 37
Installation . . . 38
Drive Motor . . . 38
Removal . . . 38
Installation . . . 40
Drive Wheels . . . 42
Removal . . . 42
Installation . . . 42
Drive Switch . . . 43
Removal . . . 43
Installation . . . 44
Drive/Axle Bearings . . . 45
Removal . . . 45
Installation . . . 46
Drive Chain . . . 48
Removal . . . 48
Installation . . . 48
Motor Control Board . . . 49
Removal . . . 49
Installation . . . 50
Speed Control . . . 51
Removal . . . 51
Installation . . . 52
Troubleshooting - Drive System . . . 53
Fluid Pump Runs Constantly . . . 54
Control Board Malfunction . . . 55
Control Board Malfunction (Steps) . . . 56
Pump Control Status LED . . . 57
Parts Drawing . . . 58
25M232 . . . 58
Parts List - 25M232 . . . 59
Parts Drawing . . . 60
Self-Propelled Drive - Series A . . . 60
Parts List - Self-Propelled Drive - Series A . . . 61
Parts Drawing . . . 62
Self-Propelled Drive - Series B . . . 62
Parts List - Self-Propelled Drive - Series B . . . 63
Parts Drawing . . . 64
Parts List - 25M232 . . . 65
Parts Drawing and List - Pinion Housing . . . 66
Gun Arm Parts . . . 67
Pressure Control/Filter Assembly . . . 68
Parts List - Pressure Control/Filter Assembly . . . 69
Pressure Control Wiring Diagram . . . 70
Drive Control Wiring Diagram . . . 71
Technical Data . . . 72
Airlessco Standard Warranty . . . 74

Warnings

The following warnings are for the setup, use, grounding, maintenance, and repair of this equipment. The exclamation point symbol alerts you to a general warning and the hazard symbols refer to procedure-specific risks. When these symbols appear in the body of this manual or on warning labels, refer back to these Warnings. Product-specific hazard symbols and warnings not covered in this section may appear throughout the body of this manual where applicable.

⚠ WARNING

SKIN INJECTION HAZARD

High-pressure spray is able to inject toxins into the body and cause serious bodily injury. In the event that injection occurs, **get immediate surgical treatment.**

- Do not aim the gun at, or spray any person or animal.
- Keep hands and other body parts away from the discharge. For example, do not try to stop leaks with any part of the body.
- Always use the nozzle tip guard. Do not spray without nozzle tip guard in place.
- Use Graco nozzle tips.
- Use caution when cleaning and changing nozzle tips. In the case where the nozzle tip clogs while spraying, follow the **Pressure Relief Procedure** for turning off the unit and relieving the pressure before removing the nozzle tip to clean.
- Equipment maintains pressure after power is shut off. Do not leave the equipment energized or under pressure while unattended. Follow the **Pressure Relief Procedure** when the equipment is unattended or not in use, and before servicing, cleaning, or removing parts.
- Check hoses and parts for signs of damage. Replace any damaged hoses or parts.
- This system is capable of producing 3300 psi. Use Graco replacement parts or accessories that are rated a minimum of 3300 psi.
- Always engage the trigger lock when not spraying. Verify the trigger lock is functioning properly.
- Verify that all connections are secure before operating the unit.
- Know how to stop the unit and bleed pressure quickly. Be thoroughly familiar with the controls.

FIRE AND EXPLOSION HAZARD

Flammable fumes, such as solvent and paint fumes, in **work area** can ignite or explode. Paint or solvent flowing through the equipment can cause static sparking. To help prevent fire and explosion:

- Use equipment only in well ventilated area.
- Do not fill fuel tank while engine is running or hot; shut off engine and let it cool. Fuel is flammable and can ignite or explode if spilled on hot surface.
- Eliminate all ignition sources; such as pilot lights, cigarettes, portable electric lamps, and plastic drop cloths (potential static sparking).
- Ground all equipment in the work area. See **Grounding** instructions.
- Never spray or flush solvent at high pressure.
- Keep work area free of debris, including solvent, rags and gasoline.
- Do not plug or unplug power cords, or turn power or light switches on or off when flammable fumes are present.
- Use only grounded hoses.
- Hold gun firmly to side of grounded pail when triggering into pail. Do not use pail liners unless they are anti-static or conductive.
- **Stop operation immediately** if static sparking occurs or you feel a shock**.** Do not use equipment until you identify and correct the problem.
- Keep a working fire extinguisher in the work area.

WARNING

EQUIPMENT MISUSE HAZARD

Misuse can cause death or serious injury.

- Do not operate the unit when fatigued or under the influence of drugs or alcohol.
- Do not exceed the maximum working pressure or temperature rating of the lowest rated system component. See **Technical Data** in all equipment manuals.
- Use fluids and solvents that are compatible with equipment wetted parts. See **Technical Data** in all equipment manuals. Read fluid and solvent manufacturer's warnings. For complete information about your material, request Safety Data Sheet (SDS) from distributor or retailer.
- Do not leave the work area while equipment is energized or under pressure.
- Turn off all equipment and follow the **Pressure Relief Procedure** when equipment is not in use.
- Check equipment daily. Repair or replace worn or damaged parts immediately with genuine manufacturer's replacement parts only.
- Do not alter or modify equipment. Alterations or modifications may void agency approvals and create safety hazards.
- Make sure all equipment is rated and approved for the environment in which you are using it.
- Use equipment only for its intended purpose. Call your distributor for information.
- Route hoses and cables away from traffic areas, sharp edges, moving parts, and hot surfaces.
- Do not kink or over bend hoses or use hoses to pull equipment.
- Keep children and animals away from work area.
- Comply with all applicable safety regulations.

MOVING PARTS HAZARD

Moving parts can pinch, cut, or amputate fingers and other body parts.

- Keep clear of moving parts.
- Do not operate equipment with protective guards or covers removed.
- Pressurized equipment can start without warning. Before checking, moving, or servicing equipment, follow the **Pressure Relief Procedure** and disconnect all power sources.

ENTANGLEMENT HAZARD

Rotating parts can cause serious injury.

- Keep clear of moving parts.
- Do not operate equipment with protective guards or covers removed.
- Do not wear loose clothing, jewelry or long hair while operating equipment.
- Equipment can start without warning. Before checking, moving, or servicing equipment, remove fuse near battery.

CARBON MONOXIDE HAZARD

Exhaust contains poisonous carbon monoxide, which is colorless and odorless. Breathing carbon monoxide can cause death.

- Do not operate in an enclosed area.

TOXIC FLUID OR FUMES HAZARD

Toxic fluids or fumes can cause serious injury or death if splashed in the eyes or on skin, inhaled, or swallowed.

- Read SDS to know the specific hazards of the fluids you are using.
- Store hazardous fluid in approved containers, and dispose of it according to applicable guidelines.

BURN HAZARD

Equipment surfaces and fluid that's heated can become very hot during operation. To avoid severe burns:

- Do not touch hot fluid or equipment.

⚠WARNING

PERSONAL PROTECTIVE EQUIPMENT

Wear appropriate protective equipment when in the work area to help prevent serious injury, including eye injury, hearing loss, inhalation of toxic fumes, and burns. This protective equipment includes but is not limited to:

- Protective eyewear, and hearing protection.
- Respirators, protective clothing, and gloves as recommended by the fluid and solvent manufacturer.

CALIFORNIA PROPOSITION 65

- The engine exhaust from this product contains a chemical known to the state of California to cause cancer, birth defects or other reproductive harm.
- This product contains a chemical known to the State of California to cause cancer, birth defects or other reproductive harm. Wash hands after handling.

Uni-Tip Selection

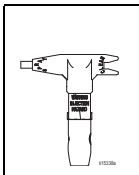					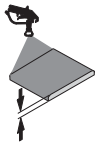	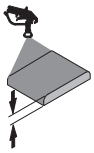	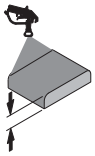
69215ST*	2 (5)				✔	✔	
69217ST		4 (10)				✔	
69219ST		4-6 (10-15)				✔	
69315ST		6 (15)			✔		
69317ST		6 (15)			✔	✔	
69319ST		6 (15)				✔	
69321ST		6 (15)				✔	
69323ST			6-8 (15-20)			✔	
69325ST			6-8 (15-20)				✔
69417ST			6-8 (15-20)		✔		
69419ST			8-10 (20-25)			✔	
69421ST			8-10 (20-25)			✔	
69423ST			8-10 (20-25)			✔	
69425ST			8-10 (20-25)				✔
69427ST			8-10 (20-25)				✔
69431ST			8-10 (20-25)				✔
69621ST				12-14 (30-36)		✔	
69623ST				12-14 (30-36)		✔	
69625ST				12-14 (30-36)			✔
69627ST				12-14 (30-36)			✔
69629ST				12-14 (30-36)			✔
** Use 100 mesh filter to reduce tip clogs*							

Component Identification

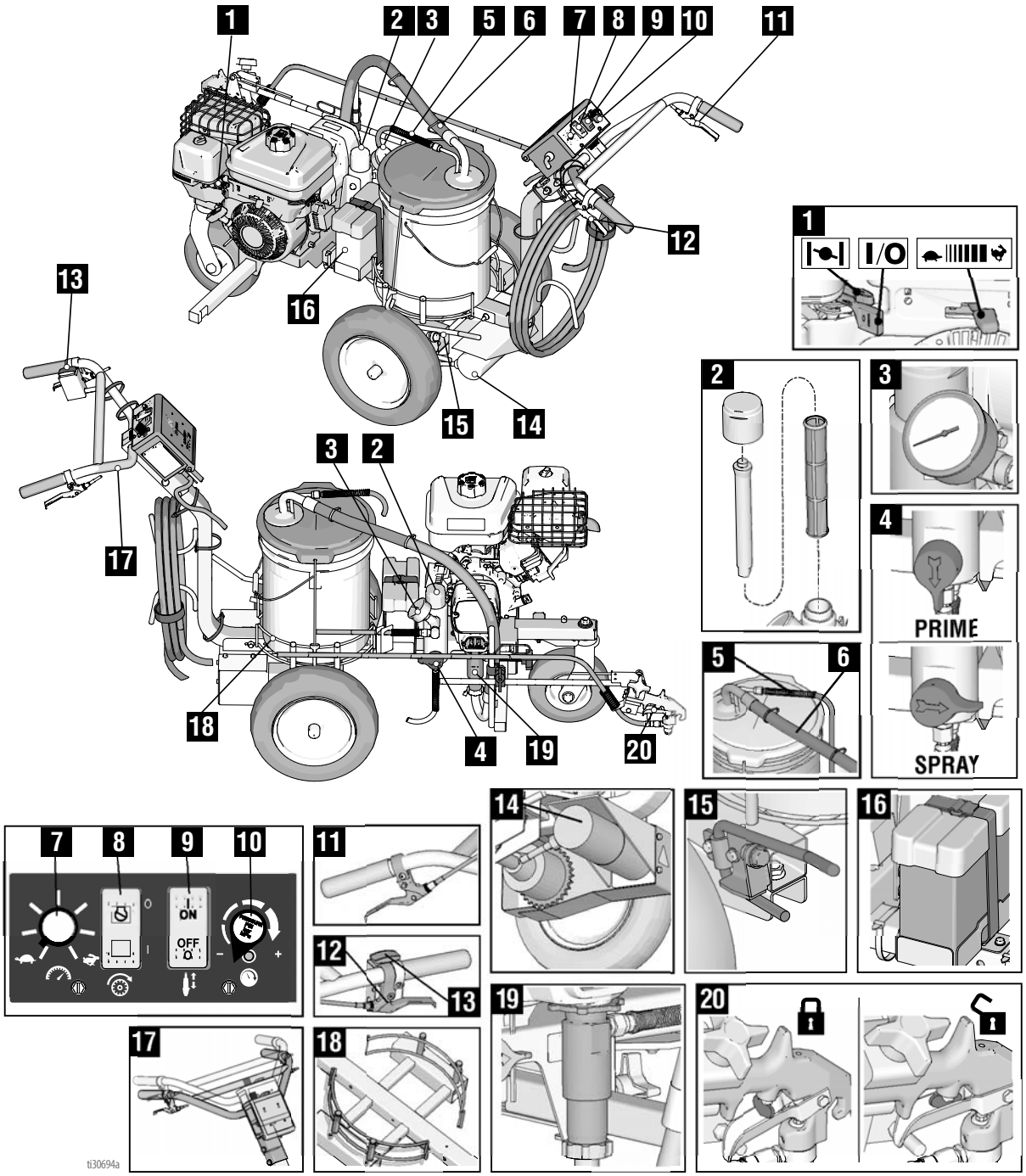

1	Engine Controls
2	Filter
3	Gauge
4	Prime/Spray
5	Drain Hose
6	Suction Tube
7	Speed Control
8	Drive Power Switch
9	Pump Switch
10	Pressure Control

11	Spray Gun Trigger
12	Front Wheel Lock/Unlock
13	Drive Control
14	Drive Motor
15	Brake
16	Battery
17	Adjustable Handle
18	Adjustable Pail Holder
19	Pump
20	Trigger Lock

Grounding Procedure

(For Flammable Materials Only)

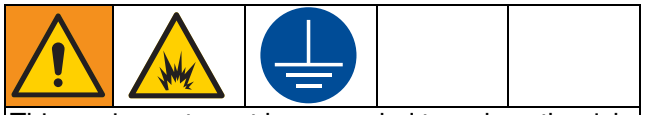

This equipment must be grounded to reduce the risk of static sparking. Static sparking can cause fumes to ignite or explode. Grounding provides an escape wire for the electric current.

1. Position striper so that the tires are not on pavement.
2. Striper is shipped with a grounding clamp. Grounding clap must attach to grounded object. (e.g. metal sign post).

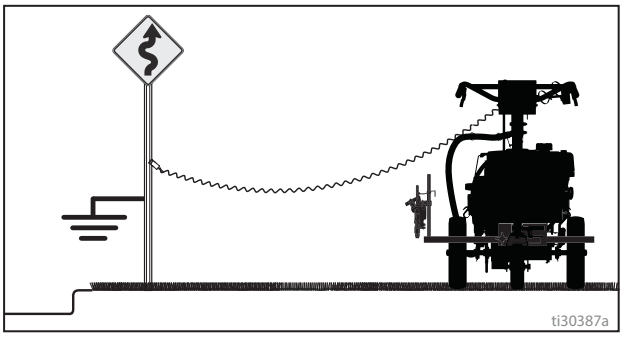

Pressure Relief Procedure

Follow the **Pressure Relief Procedure** whenever you see this symbol.

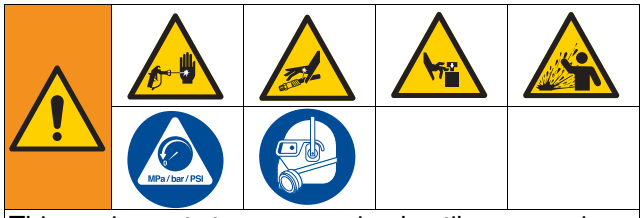

This equipment stays pressurized until pressure is manually relieved. To help prevent serious injury from pressurized fluid, such as skin injection, splashed fluid and moving parts, follow the **Pressure Relief Procedure** whenever sprayer is stopped and before sprayer is cleaned or checked, and before equipment is serviced.

1. Perform **Grounding Procedure** if using flammable materials.
2. Set pump switch **OFF.** Turn engine **OFF** by pressing the engine kill switch at the controls, or by moving the lever on the engine.

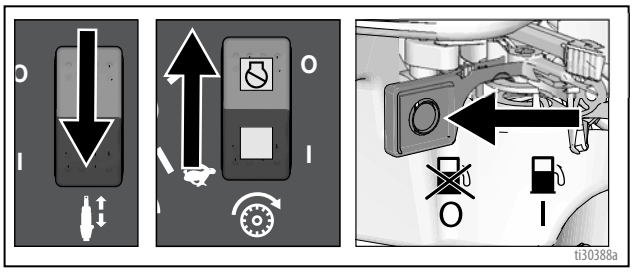

3. Turn pressure to lowest setting. Trigger gun to relieve pressure.

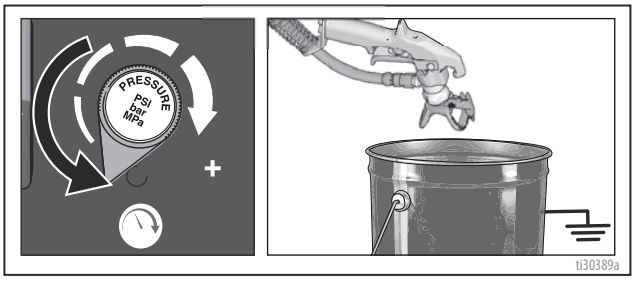

4. Engage the trigger lock. Turn prime valve down.

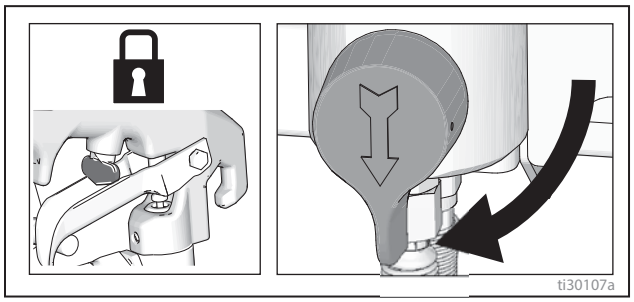

5. If you suspect the spray tip or hose is clogged or that pressure has not been fully relieved:
   a. VERY SLOWLY loosen tip guard retaining nut or hose end coupling to relieve pressure gradually.
   b. Loosen nut or coupling completely.
   c. Clear hose or tip obstruction.

Maintenance

DAILY: Check hose for wear and damage.

DAILY: Check gun safety for proper operation.

DAILY: Check pressure drain valve for proper operation.

DAILY: Check and fill the gas tank.

DAILY: Check level of TSO in displacement pump packing nut. Fill nut, if necessary. Keep TSO in nut to help prevent fluid buildup on piston rod and premature wear of packings and pump corrosion.

Engine Maintenance Schedule

FIRST 5 HOURS: Change oil

EVERY 8 HOURS OR DAILY:

- Check engine oil level.
- Clean area around muffler and controls.
- Clean air intake grille.

EVERY 25 HOURS OR ANNUALLY:

- Clean air filter.
- Clean pre-cleaner.

EVERY 50 HOURS OR ANNUALLY:

- Change engine oil.
- Service exhaust system.

EVERY 100 HOURS: Change gear reduction oil (if equipped)

ANNUALLY:

- Replace spark plug.
- Replace air filter.
- Replace pre-cleaner.
- Service fuel system.
- Service cooling system.
- Check valve clearance.

SPARK PLUG: Use only Briggs & Stratton 491055S or Champion RC12YC spark plug. Gap plug to 0.030 in. (0.762mm). Use spark plug wrench when installing and removing plug.

Front Wheel Alignment:

Align front wheel as follows:

1. Loosen cap screw (114).

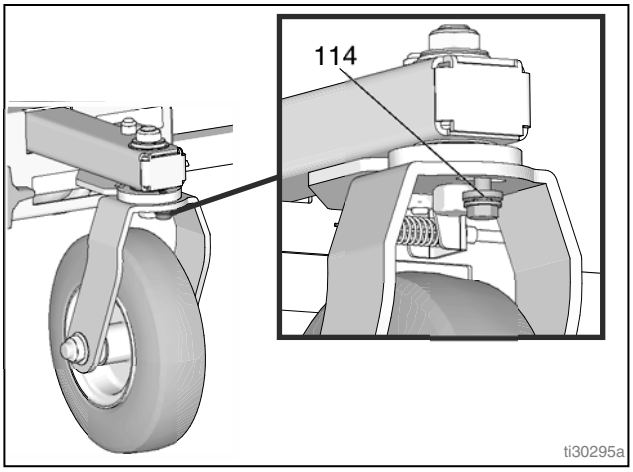

2. Position front wheel left or right, as necessary, to straighten alignment.
3. Tighten cap screw. Push striper and let striper roll with hands off of striper.

NOTE: If striper veers right or left, repeat steps 1 and 2 until striper rolls straight.

Operation

Setup

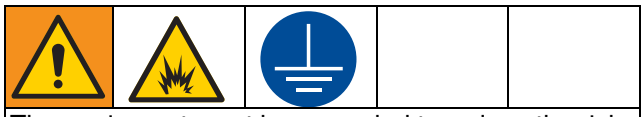

The equipment must be grounded to reduce the risk of static sparking. Static sparking can cause fumes to ignite or explode. Grounding provides an escape wire for the electric current.

1. Ground striper with grounding clamp if using flammable materials.

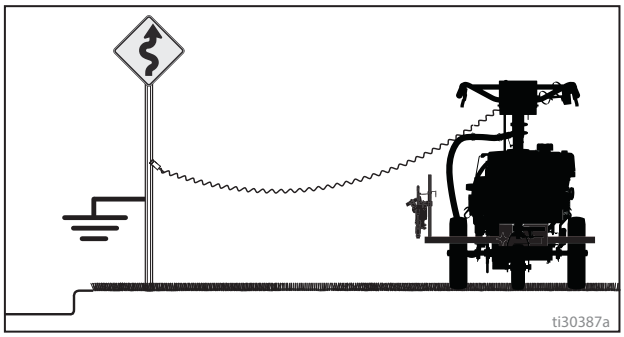

2. Fill throat packing nut with TSO.

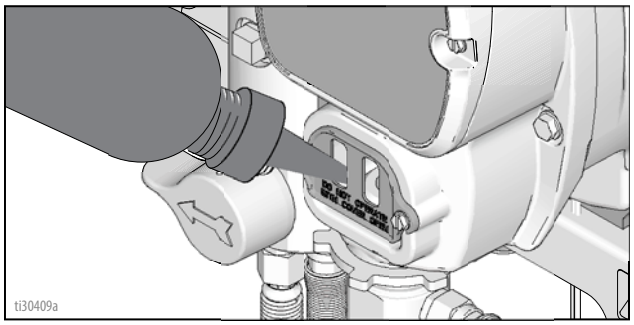

3. Check engine oil level. See Briggs & Stratton engine manual.

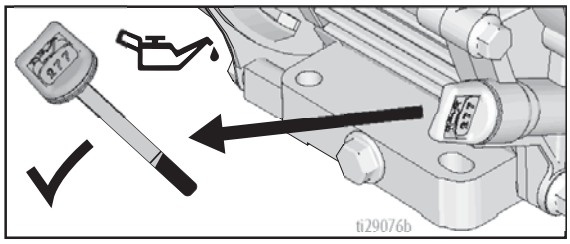

4. Fill fuel tank. See Briggs & Stratton engine manual.

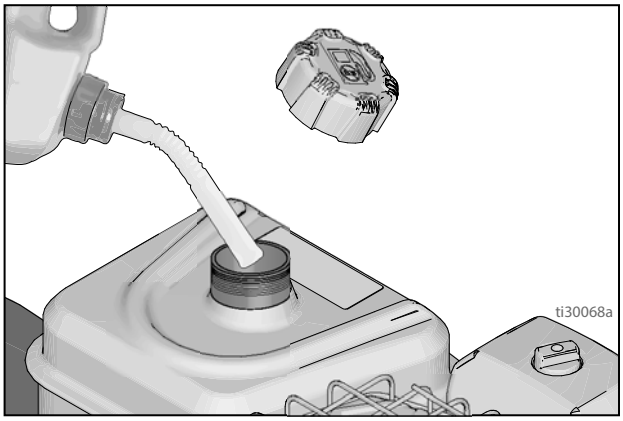

5. Check that tires are inflated to recommended pressure.

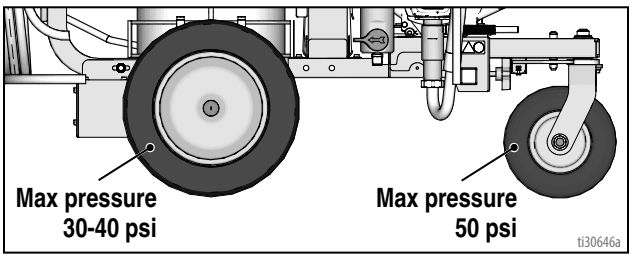

Self-Propelled Drive

The self-propelled drive assists the user in moving the striper through turf and/or up a grade. The drive can be used with or without the engine running. Maximum performance is achieved with the engine running at full RPM.

NOTICE

Running the drive with the engine off, or at a lower than maximum RPM, may cause damage to the battery from over-discharging.

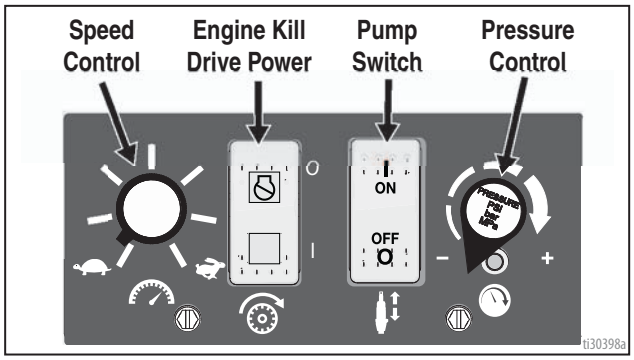

NOTICE

Leaving the drive system on when not using, or when storing the machine, may cause damage to the battery from over discharging.

Power ON/OFF

The drive power switch includes the engine kill function.

1. Ensure the Drive Control switch is in the “N” position.

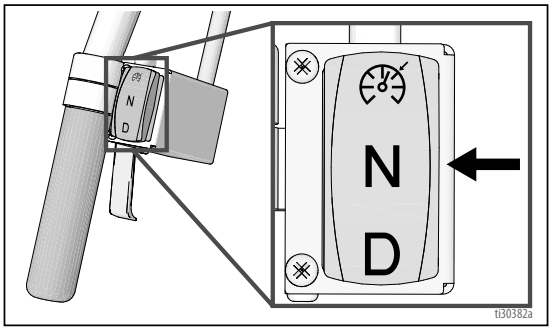

2. Press the bottom portion of the Engine Kill/Drive Power switch to power the drive system.

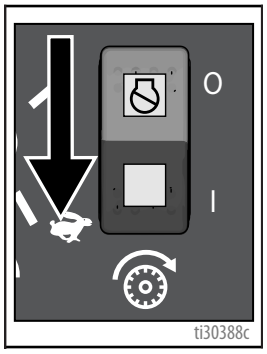

3. Move the Engine Kill/Drive Power switch to the middle position to shut off the drive system. Fully depress the top portion of the Engine Kill/Drive Power switch to shut off the gas engine.The drive system is off when the green light on the switch is off.

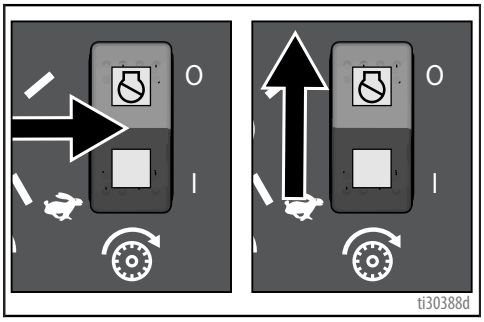

Drive Control

The drive control switch on the left handlebar has three positions to control the engagement of the drive system.

- “N” places the drive in neutral and allows the unit to be moved manually.
- “D” must be held down to engage the drive and move the striper forward.
- Cruise keeps the drive engaged, until disengaged by momentarily depressing “D”.

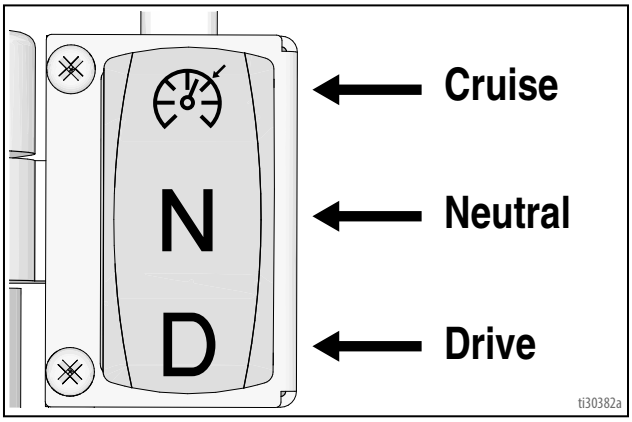

Speed Adjustment

The speed control will vary the speed from 0 to maximum over the full range of the speed knob. Turning the speed knob fully counterclockwise will result in no motion, and turning the speed knob fully clockwise will result in maximum speed.

Changes in the terrain may require adjusting the speed; i.e. moving from turf to pavement.

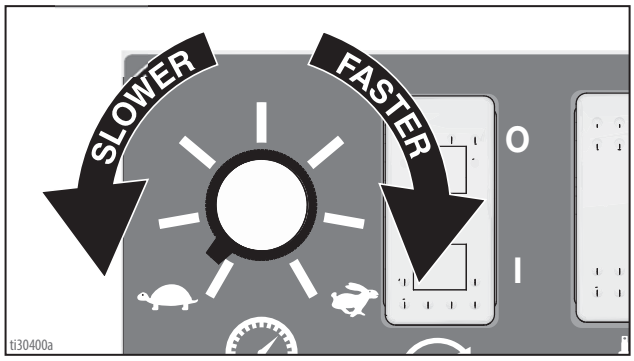

Speed Control

1. With the engine already running, and the drive system OFF, turn the speed knob fully counterclockwise to the “0” speed position.

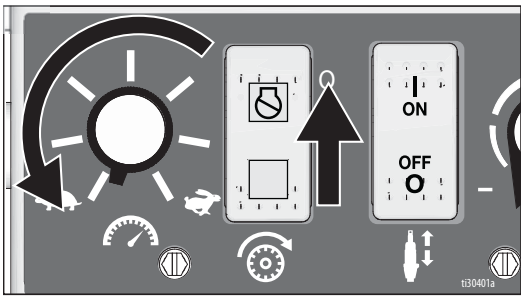

2. Press Cruise on the driver control switch to engage the self-propelled drive.

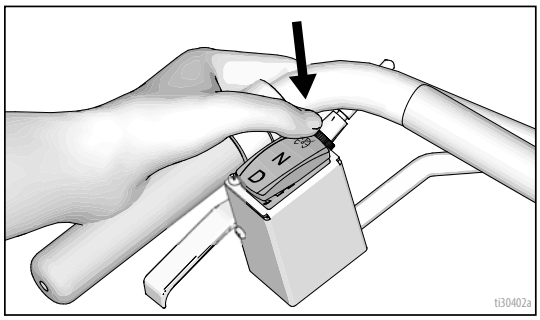

3. With a clear and safe path ahead of the striper, and with one hand on the left handlebar, slowly turn the speed knob clockwise until the desired speed is achieved on the specific terrain.

NOTE: Due to battery level and system load, the drive may not engage until close to the second tick mark.

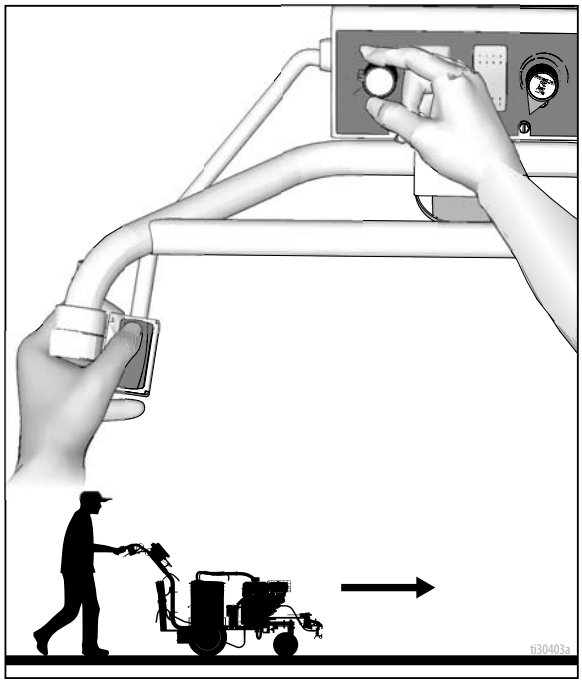

Startup

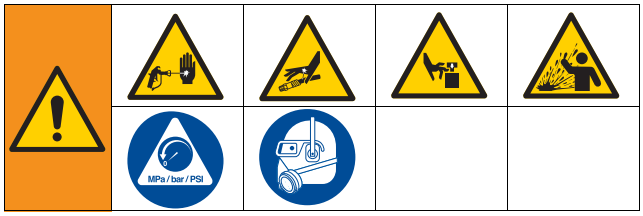

1. Perform **Grounding Procedure (For Flammable Materials Only)**, page 8.
2. Place siphon tube set in grounded metal pail partially filled with flushing fluid. Attach ground wire to pail and to true earth ground. Use water to flush water-base paint and mineral spirits to flush oil-base paint and storage oil.

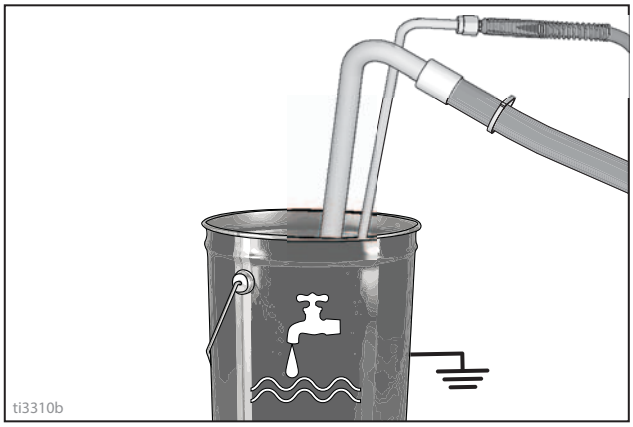

3. Turn prime valve down.

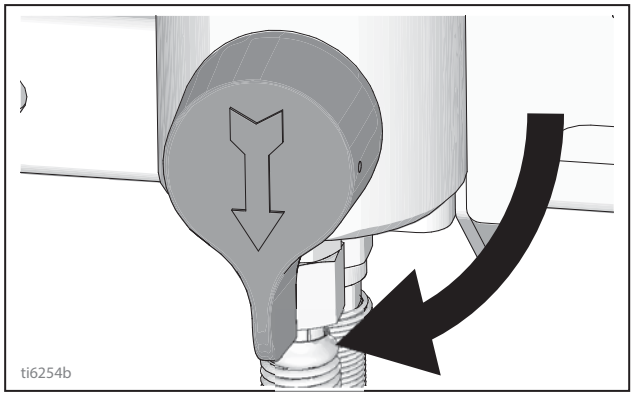

4. Turn pressure control counterclockwise to lowest pressure.

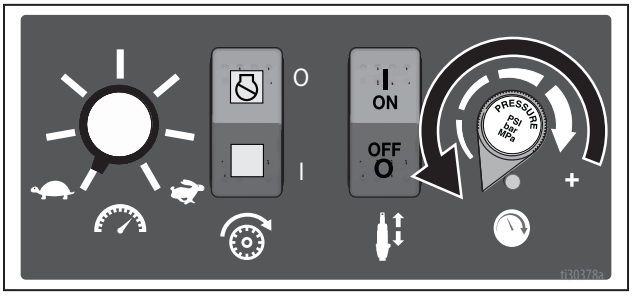

5. Set pump switch to OFF.

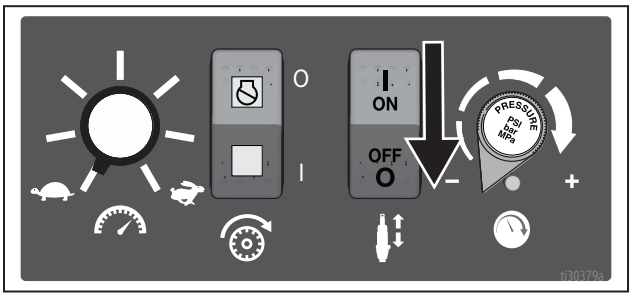

6. Set drive system switch to OFF.

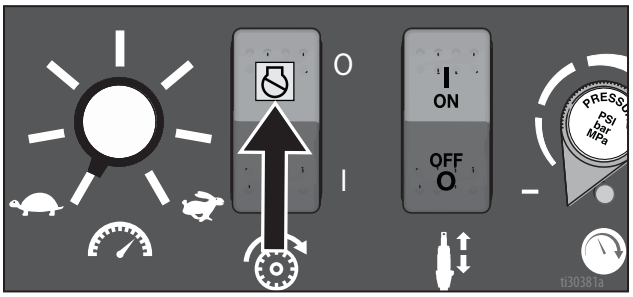

7. Set drive control switch to “N”.

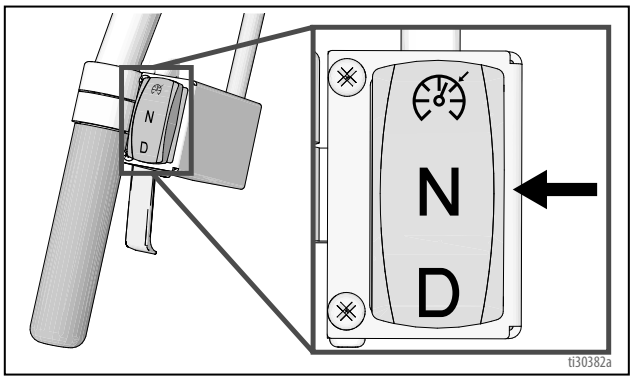

8. Start Engine.
   a. Move fuel valve to open.

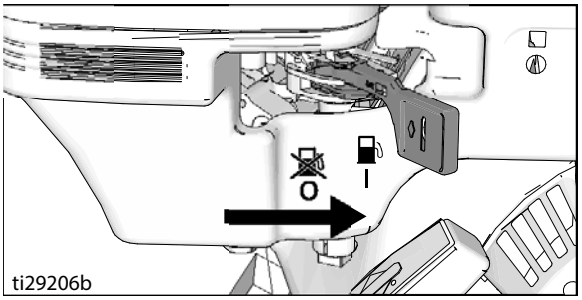

   b. Move choke to closed.

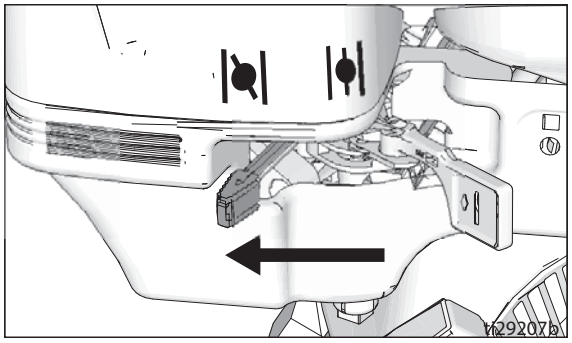

   c. Set throttle to fast.

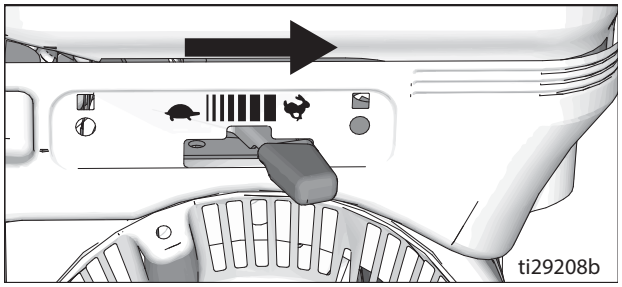

   d. Pull starter cord.

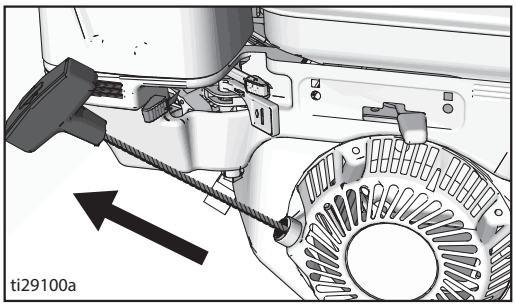

   e. After engine starts, move choke to open.

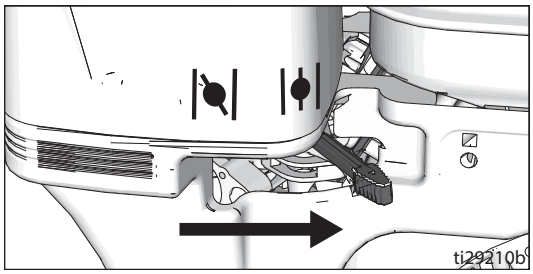

   f. Set throttle to slow.

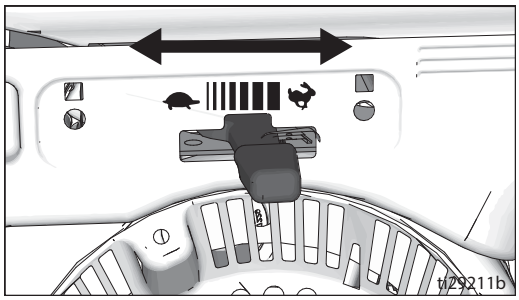

NOTICE
Do not run pump without fluid flow. Damage to packings can occur.

9. Set pump switch to ON. Increase pressure enough to start pump. Allow fluid to circulate for 15 seconds.

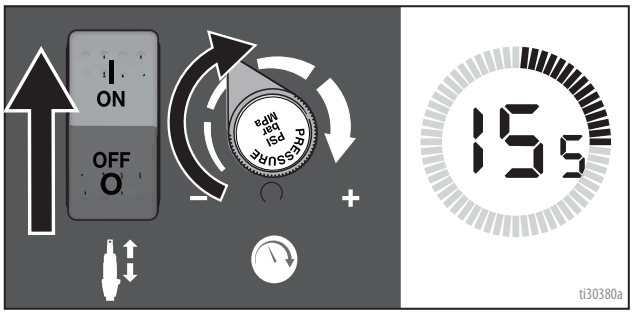

10. Turn pressure down, close prime valve. Disengage gun trigger lock.

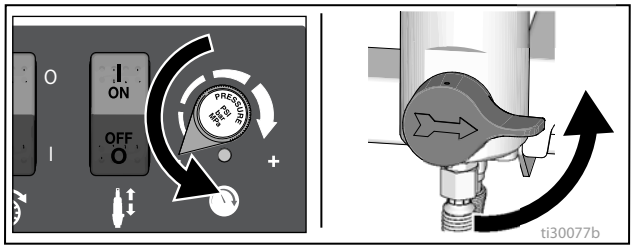

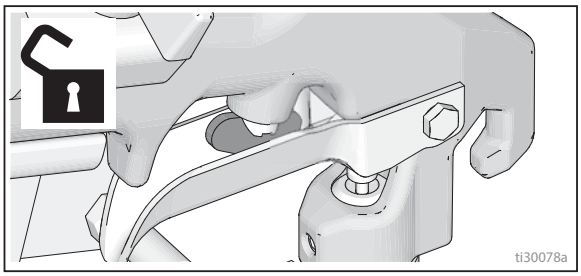

11. Hold gun against grounded metal flushing pail. Trigger gun and increase fluid pressure slowly until pump runs smoothly.

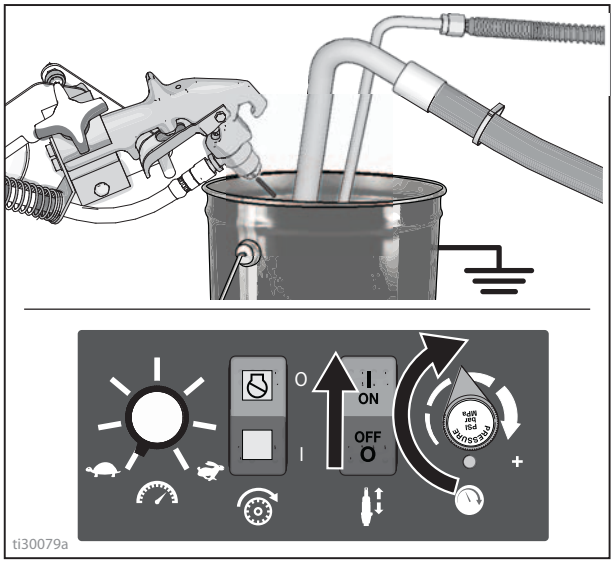

12. Inspect fittings for leaks. Do not stop leaks with your hand or a rag! If leaks occur, turn striper OFF immediately. Perform **Grounding Procedure (For Flammable Materials Only)**, page 8. Tighten leaky fittings. Repeat **Startup**, steps 1 - 7. If no leaks, continue to trigger gun until system is thoroughly flushed. Proceed to step 8.

13. Place siphon tube in paint pail.

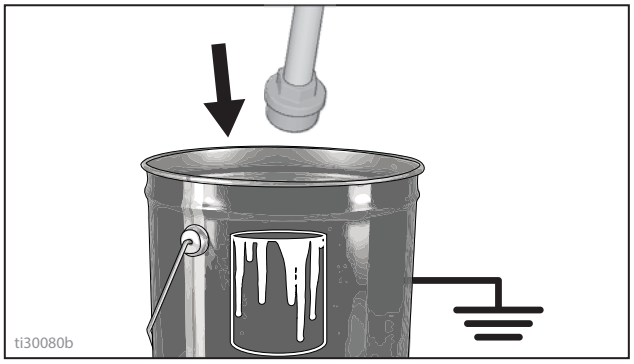

14. Trigger gun again into flushing fluid pail until paint appears. Assemble Uni-Tip and Uni-Tip Guard.

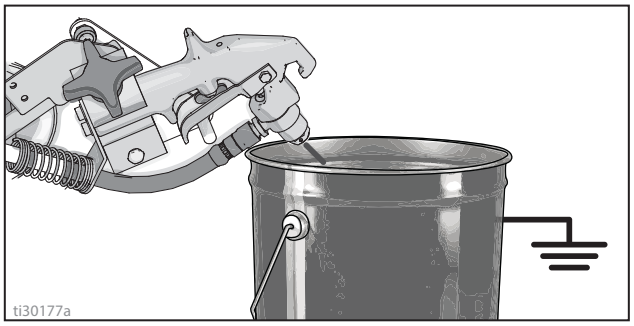

Uni-Tip and Guard Assembly

To avoid serious injury from skin injection do not put your hand in front of the spray tip when installing or removing the spray tip and tip guard.

To prevent spray tip leaks, make certain spray tip and tip guard are installed properly.

1. Perform **Pressure Relief Procedure**, page 8.
2. Engage trigger lock. Insert seat and Uni-Tip Seal. Insert Uni-Tip.

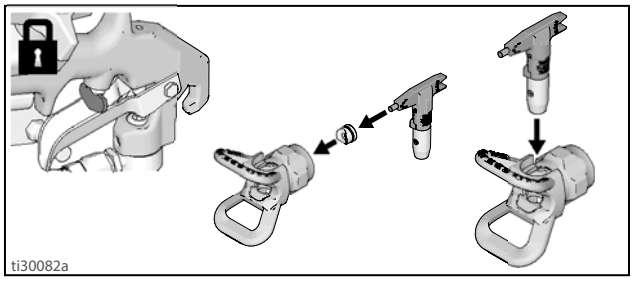

3. Screw assembly onto gun. Hand tighten.

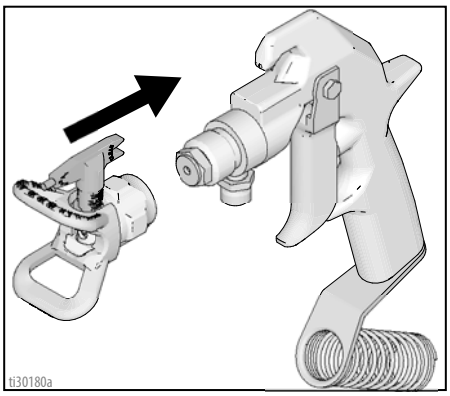

Gun Placement

Install Gun

1. Insert gun into gun holder with hose guard pressed against the holder assembly bracket. Tighten gun into clamp.

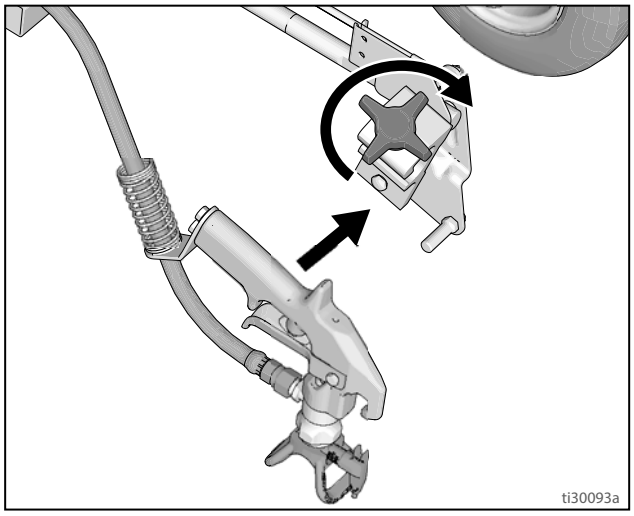

Position Gun

2. Position gun up/down and forward/reverse.

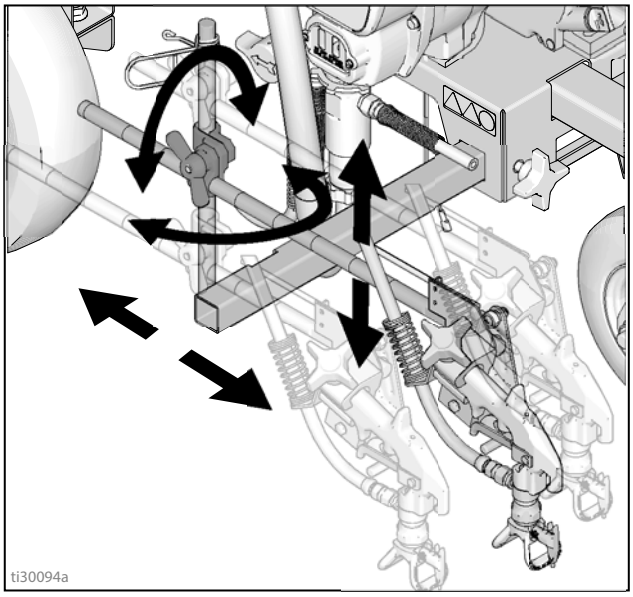

3. Position gun left/right.

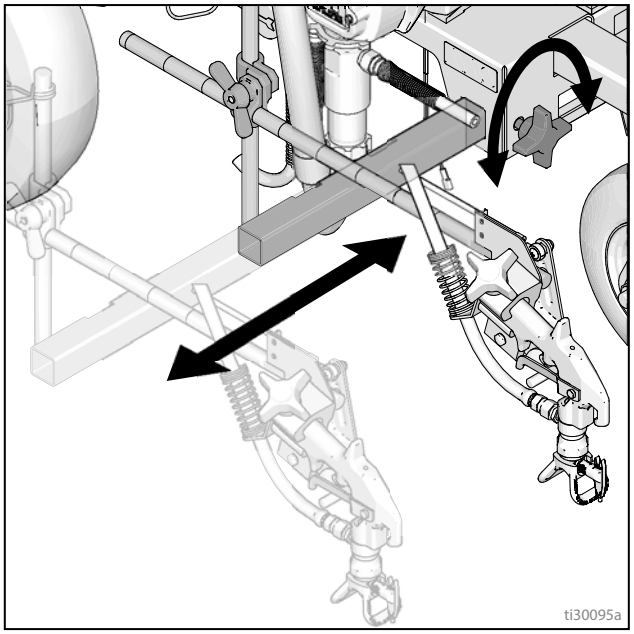

a. **Right-side gun position:** Place gun and related hardware on right-hand side.

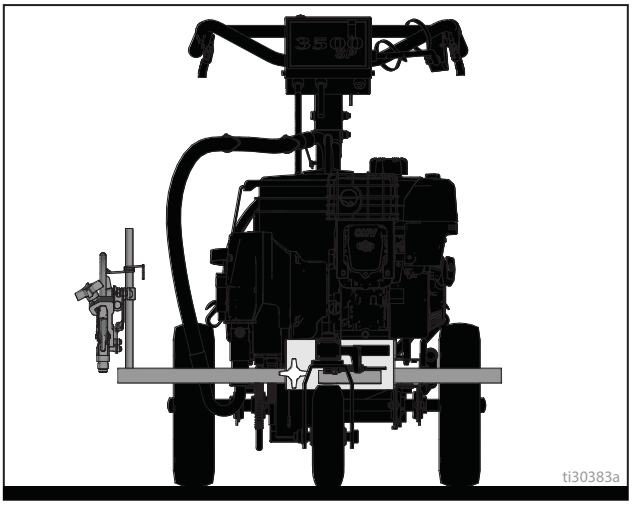

b. **Left-side gun position:** Place gun and related hardware on left-hand side.

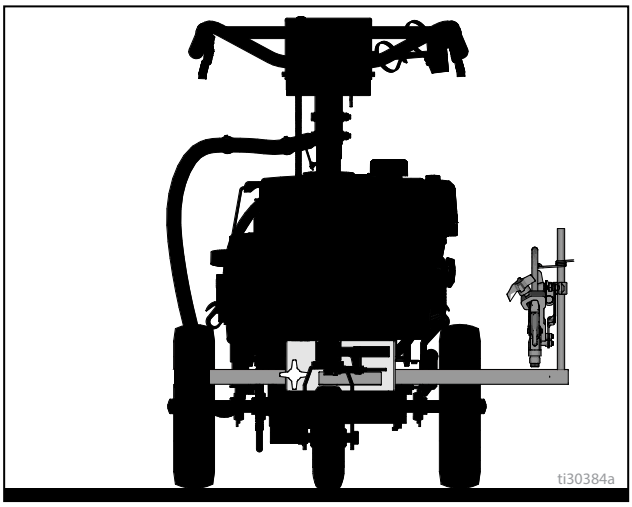

4. For **Curb Position**, place gun at 45° angle.

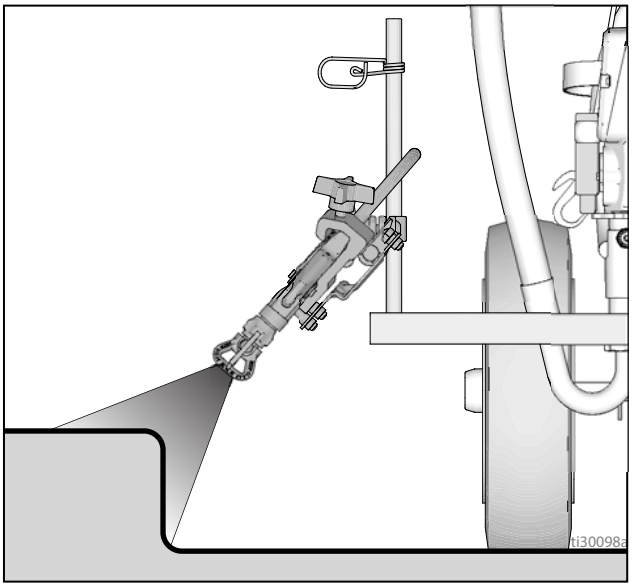

5. For **Gun Arc Spray Position**, place gun at rear of striper. Rear position improves arc quality.

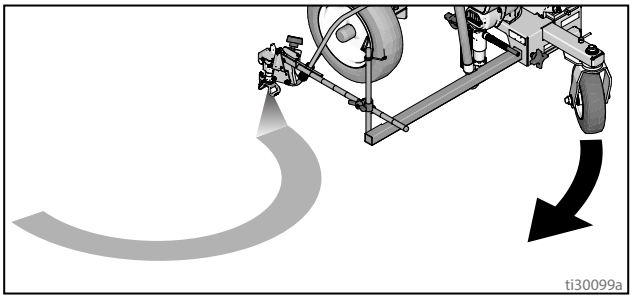

NOTE: Verify that the gun can still be triggered **and** that the trigger lock can still be engaged after installation. Make adjustments if necessary.

Paint Stripe Width

1. Adjust gun up or down to change paint stripe width.

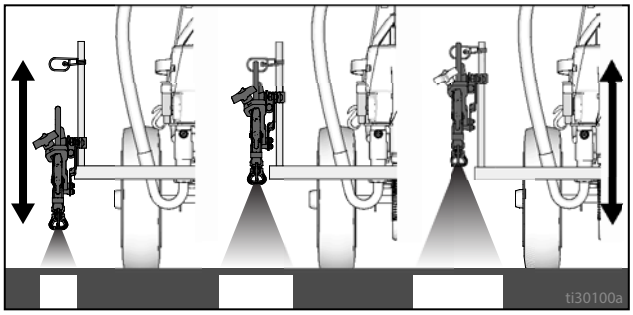

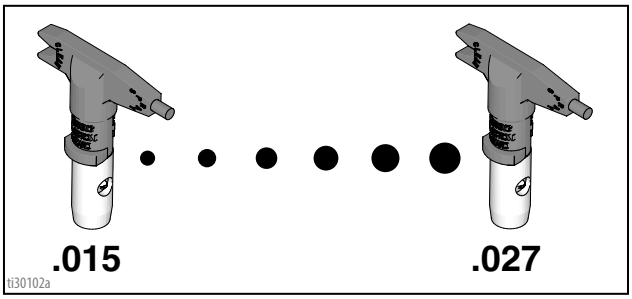

Spray Test Stripe

1. Disengage trigger lock.

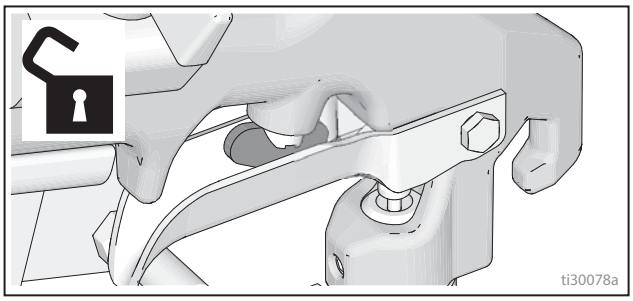

2. Trigger gun and spray test pattern. Slowly adjust pressure to eliminate heavy edges. Use smaller tip size if pressure adjustment can not eliminate heavy edges.

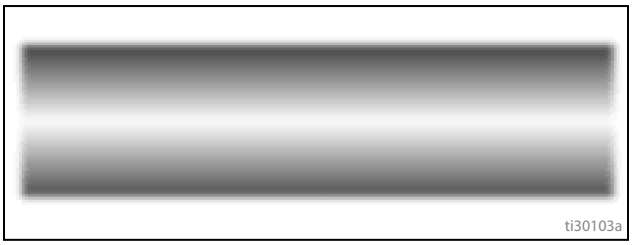

Clearing Tip Clogs

1. Release trigger. Engage gun trigger lock. Rotate Uni-Tip. Disengage gun trigger lock and trigger gun to clear the clog.

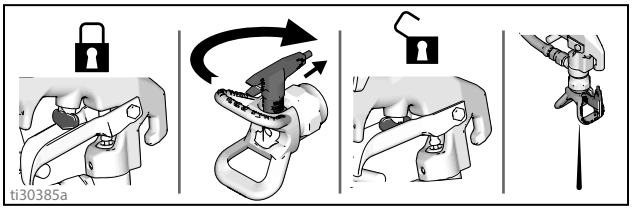

2. Engage gun trigger lock, return Uni-Tip to original position, disengage gun trigger lock and continue spraying.

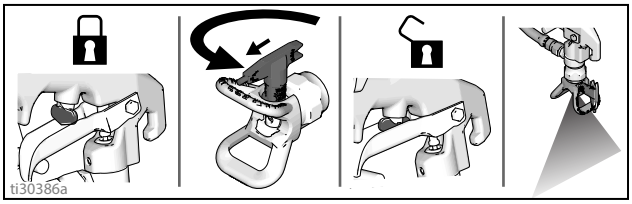

Clean-up

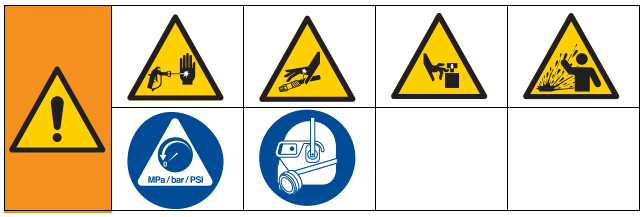

1. Perform **Pressure Relief Procedure**, page 8.
2. Remove Uni-Tip Guard and Uni-Tip.

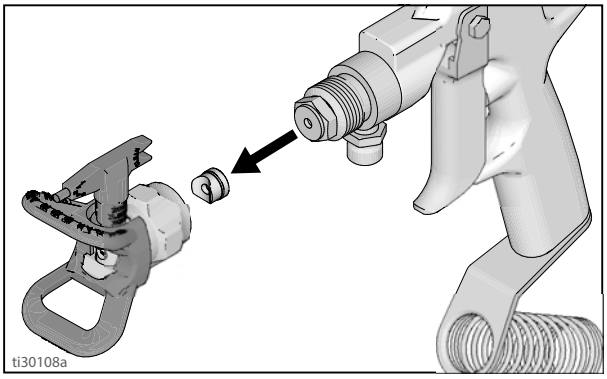

3. Unscrew cap, remove filter. Assemble without filter. Clean filter.

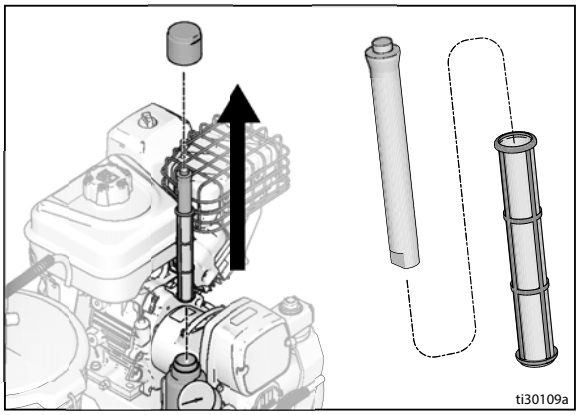

4. Clean gun filter, Uni-Tip Guard and Uni-Tip in flushing fluid. See **Flushing Recommendations**, page 23.

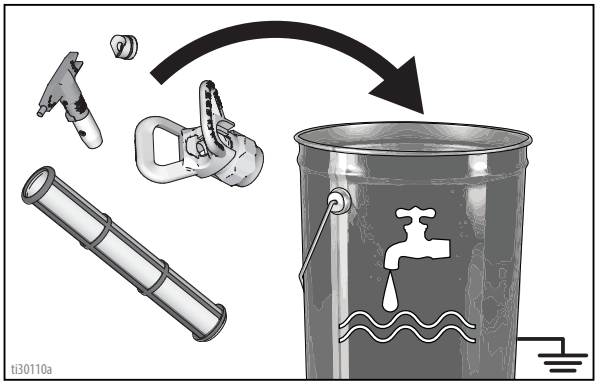

5. Remove siphon tube set from paint and place in flushing fluid. Use water or pump conditioner for water-base paint and mineral spirits for oil-base paint.

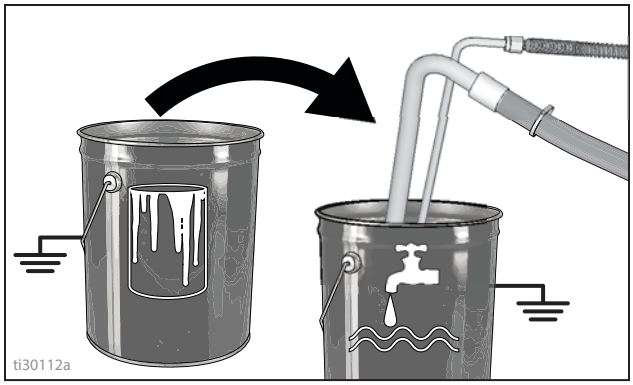

6. Turn engine **ON** and start engine. Set pump switch **ON**.

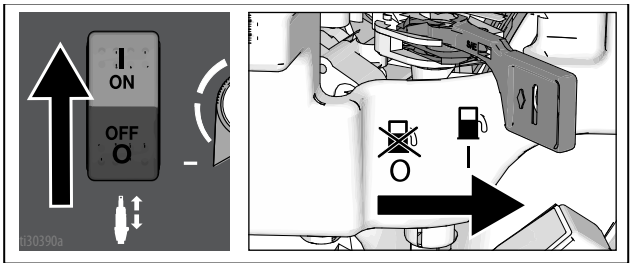

7. Close prime valve.

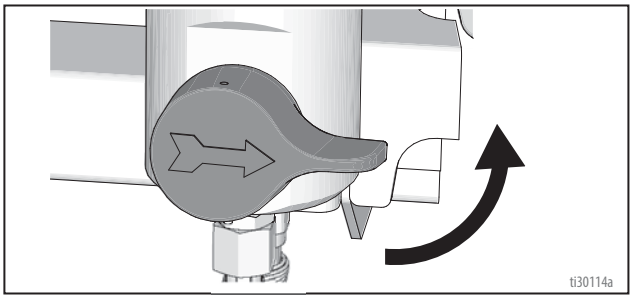

8. Hold gun against paint pail. Disengage gun trigger lock.

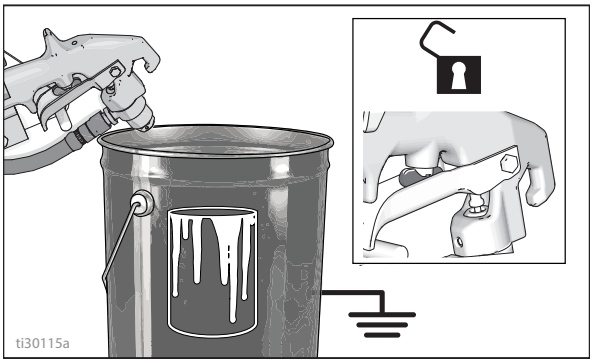

9. Gradually turn pressure control up until motor begins to drive pump. Trigger gun until flushing fluid appears.

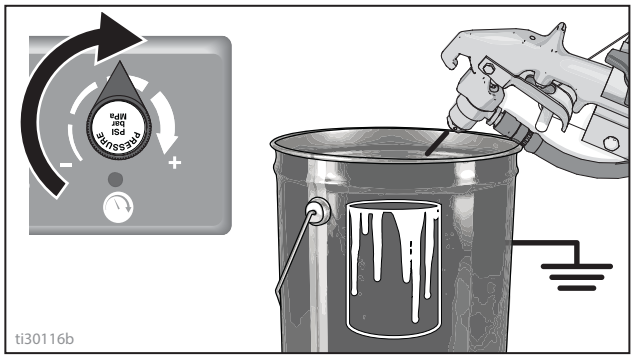

10. Move gun to flushing pail, hold gun against pail, trigger gun to thoroughly flush system. Release trigger and engage trigger lock.

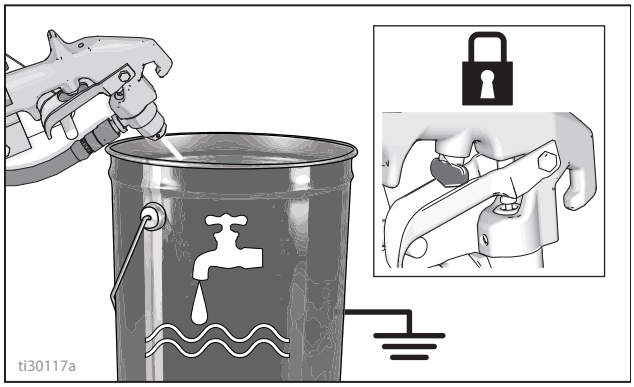

11. Open prime valve and allow flushing fluid to circulate for 20 seconds to clean drain tube.

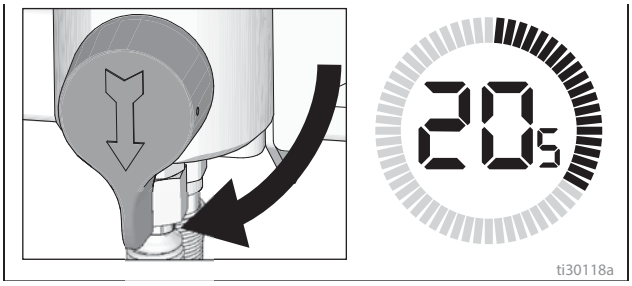

NOTICE

Do not run pump without fluid flow. Damage to packings can occur.

12. Raise siphon tube above flushing fluid and run striper for 15 to 30 seconds to drain fluid.

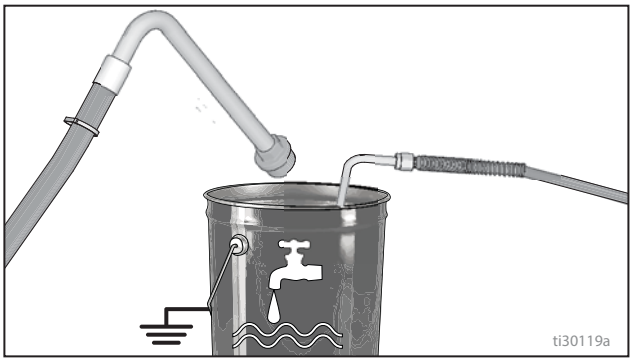

13. Set pump switch **OFF.** Turn engine **OFF** by pressing the engine kill switch at the controls, or by moving the lever on the engine.

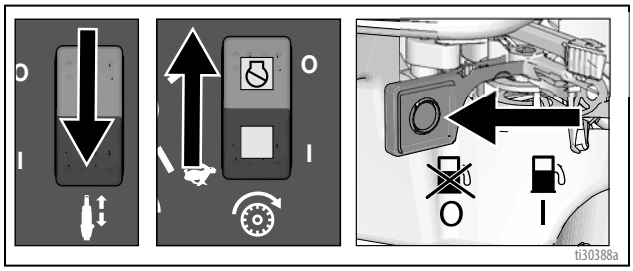

NOTICE

If flushing with water, do not leave water in sprayer for extended periods. Flush again with pump conditioner and leave protective coating in the sprayer to prevent freezing or corrosion and to increase sprayer life.

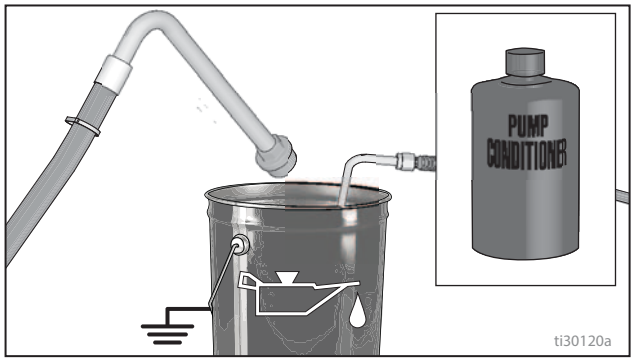

14. Close prime valve. Trigger gun into flushing pail to purge fluid from hose. Open prime valve.

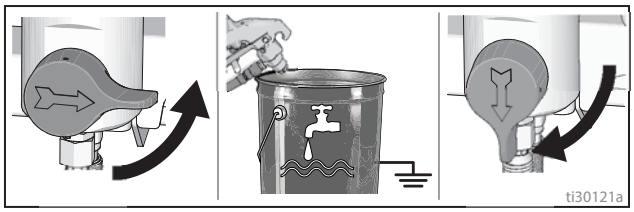

15. Install filter into filter bowl. Make sure plastic center tube is tightened securely.

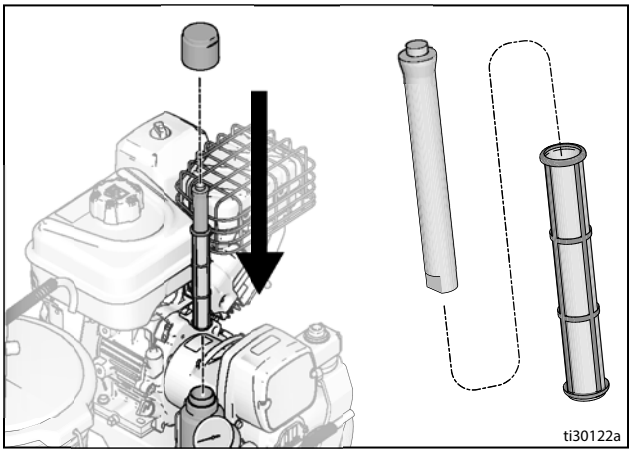

16. Clean Uni-Tip, Uni-Tip Guard and gasket with a soft bristle brush to prevent part failure due to dried materials. Assemble parts and attach loosely onto gun.

17. Wipe striper, hose and gun with a rag soaked in water or mineral spirits.

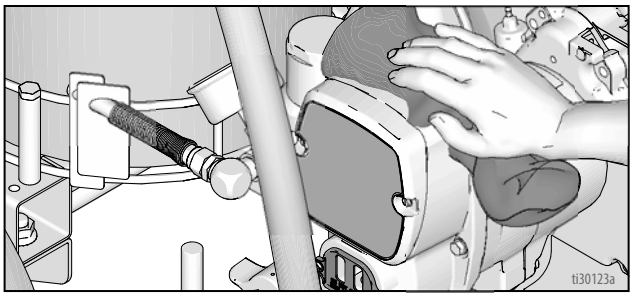

Flushing Recommendations

If you are going to:	Flush with:	Prime with:	Clean with:	Store with:
Spray with new sprayer or sprayer that has been stored	Compatible solvent such as water or mineral spirits	Compatible paint, such as water-base or oil-base	Compatible solvent such as water or mineral spirits	Mineral spirits
Spray water-base paint	Warm, soapy water, then clean water	Water-base paint	Warm, soapy water, then clean water	Mineral spirits
Spray oil-base paint	Mineral spirits	Oil-base paint	Mineral spirits	Mineral spirits
Change water-base to oil-base paint	Warm, soapy water, then clean water	Mineral spirits	Mineral spirits	Mineral spirits
Change oil-base to water-base paint	Mineral spirits, soapy water, then clean water	Water-base paint	Warm, soapy water, then clean water	Mineral spirits
Change colors, same base	Compatible solvent such as water or mineral spirits			

Troubleshooting

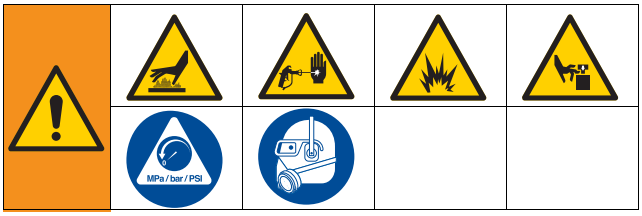

Problem	Cause	Solution
Engine won't start	Engine is out of gas	Refill gas tank. Briggs & Stratton Owner's Manual.
	Engine oil level is low	Check oil level. Replenish oil, if necessary. Briggs & Stratton Owner's Manual.
	Spark plug is disconnected or damaged	Connect spark plug cable or replace spark plug.
	Cold engine	Use choke
	Fuel shutoff / Engine kill switch is OFF	Move lever to ON position.
	Oil is seeping into combustion chamber	Remove spark plug. Pull starter 3 to 4 times. Clean or replace spark plug. Start engine. Keep sprayer upright to avoid oil seepage
Engine operates, but displacement pump does not operate	Pump switch is OFF	Turn pump switch ON
	Pressure setting too low	Turn pressure adjusting knob clockwise to increase pressure
	Fluid filter is dirty	Clean filter
	Tip or tip filter is clogged	Clean tip or tip filter (see gun manual)
	Displacement pump piston rod is stuck due to dried paint	Repair pump (see pump manual)
	Connecting rod is worn or damaged	See **Drive Housing and Connecting Rod**, page 28**.**
	Drive housing is worn or damaged	See **Drive Housing and Connecting Rod**, page 28.
	Electrical power is not energizing clutch field	See parts manual Reference pressure control repair. Pages 34, 35, 36. Reference wiring diagram. Page 70. With pump switch ON and pressure turned to MAXIMUM, use a test light to check for power between clutch test points on control board. Remove clutch wires from control board and measure resistance across clutch coil. At 70°F, the resistance must be between 1.2+0.2 ohms; if not, replace pinion housing Have pressure control checked by authorized dealer
	Clutch is worn, damaged, or incorrectly positioned	Adjust or replace clutch. Page 29.
	Pinion assembly is worn or damaged	Repair or replace pinion assembly. Page 29.

Problem	Cause	Solution
Pump output is low	Strainer is clogged	Clean strainer. See pump manual.
	Piston ball is not seating	Service piston ball. See pump manual.
	Piston packings are worn or damaged	Replace packings. See pump manual.
	O-ring in pump is worn or damaged	Replace o-ring. See pump manual.
	Intake valve ball is not seating properly	Clean intake valve. See pump manual. See operations.
	Intake valve ball is packed with material	Clean intake valve. See operations.
	Engine speed is too low	Increase pressure. See operations manual.
	Clutch is worn or damaged	Adjust or replace clutch. Page 29.
	Pressure setting is too low	Increase pressure. See operations manual.
	Fluid filter, tip filter or tip is clogged or dirty	Clean filter. See operations.
	Large pressure drop in hose with heavy materials	Use larger diameter hose and/or reduce overall length of hose. Use of more than 100 ft. of 1/4 in. hose significantly reduces performance of sprayer. Use 3/8 in. hose for optimum performance (50 ft. minimum)
Excessive paint leakage into throat packing nut	Throat packing nut is loose	Remove throat packing nut spacer. Tighten throat packing nut just enough to stop leakage.
	Throat packings are worn or damaged	Replace packings. See pump manual.
	Displacement rod is worn or damaged	Replace rod. See pump manual.
Fluid is spitting from gun	Air in pump or hose	Check and tighten all fluid connections. Reprime pump. See operations.
	Tip is partially clogged	Clear tip. See gun manual.
	Fluid supply is low or empty	Refill fluid supply. Prime pump. See operations. Check fluid supply often to prevent running pump dry.
Pump is difficult to prime	Air in pump or hose	Check and tighten all fluid connections. Reduce engine speed and cycle pump as slowly as possible during priming.
	Intake valve is leaking	Clean intake valve. Be sure ball seat is not nicked or worn and that ball seats well. Reassemble valve.
	Pump packings are worn	Replace pump packings. See pump manual.
	Paint is too thick	Thin the paint according to the supplier's recommendations
	Engine speed is too high	Decrease throttle setting before priming pump. See operations.
Clutch squeaks each time clutch engages	Clutch surfaces are not matched to each other when new and may cause noise	Clutch surfaces need to wear into each other. Noise will dissipate after a day of run time.
High engine speed at no load (> 3800 rpm)	Worn engine governor	Replace or service engine governor

Displacement Pump

Removal

1. Stop pump with piston rod (29) in its lowest position.
2. Perform **Pressure Relief Procedure**, page 8.
3. Loosen two screws (32) and remove pump rod cover (107).

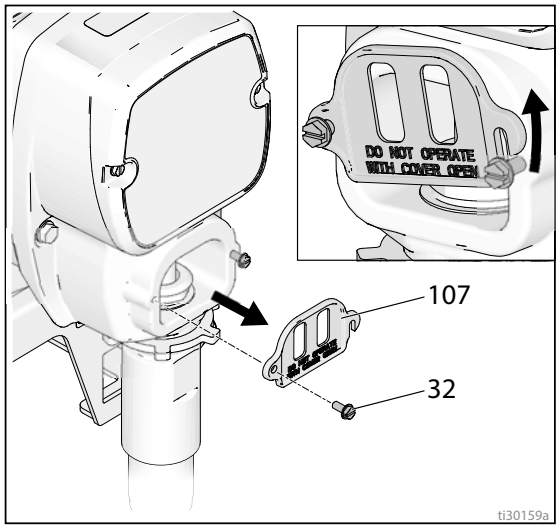

4. Remove hose (118) and suction hose (57). Use screwdriver; push retaining spring (28) up; push out pin (31).

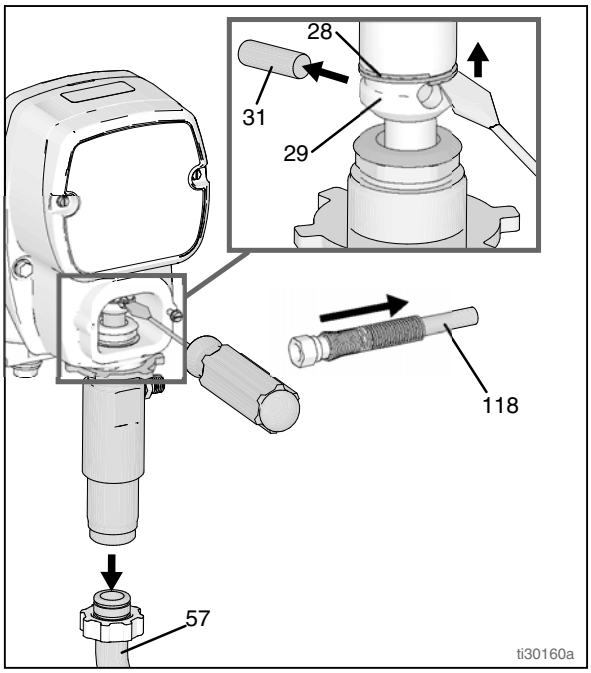

5. Loosen jam nut by hitting firmly with a hammer. Unscrew pump.

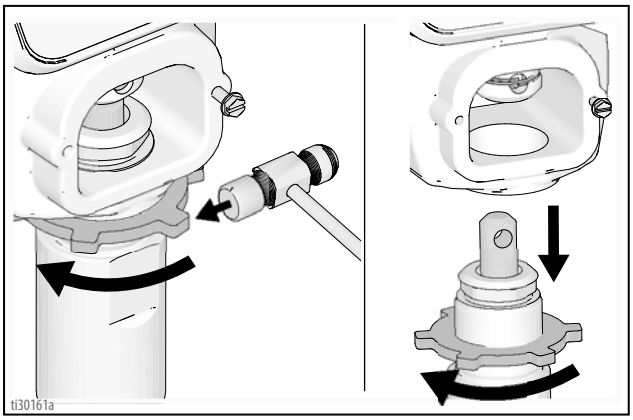

Repair

See manual 3A4347 for pump repair instructions.

Installation

If pin works loose, parts could break off due to force of pumping action. Parts could project through the air and result in serious injury or property damage. Make sure pin and retaining spring are properly installed.

NOTICE

If the pump jam nut loosens during operation, the threads of the bearing housing and drive train will be damaged. Tighten jam nut as specified.

1. Pull piston rod out distance shown. Screw in pump until holes in connecting rod and piston rod align.

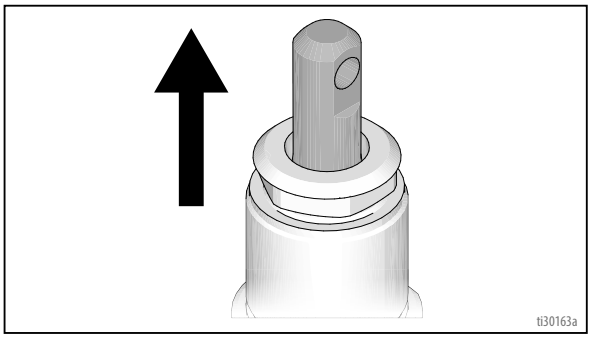

2. Push pin (31) into hole. Push retaining ring spring into groove all the way around connecting rod.

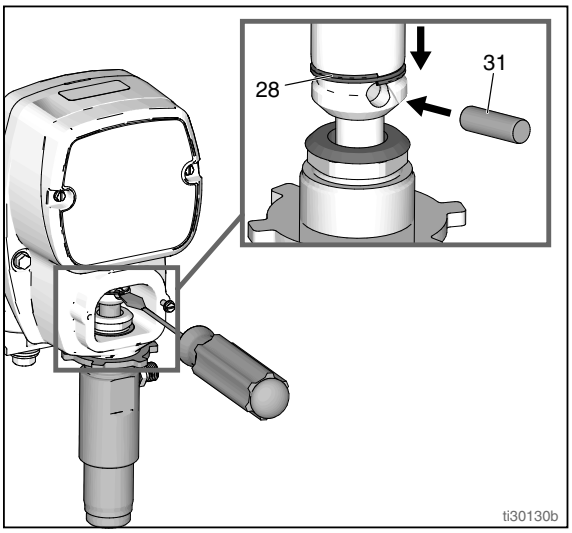

3. Screw jam nut down onto pump until nut stops. Screw pump up into drive housing until top threads of pump are flush with drive housing face. Back off pump and jam nut to align pump outlet to side. Tighten jam nut by hand, then tap 1/8 to 1/4 turn with a 20 oz (maximum) hammer to approximately 75 ±5 ft-lb (102 N·m). Connect hose (118) and suction hose (57).

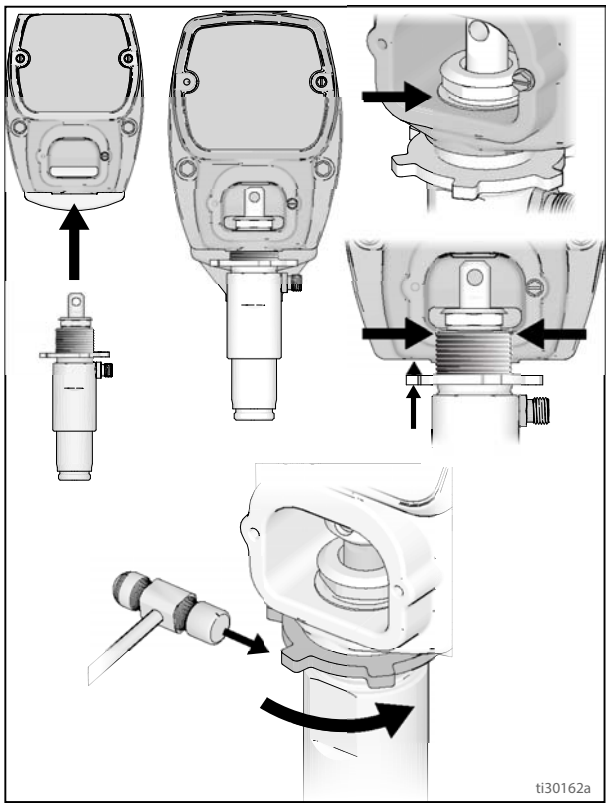

4. Fill packing nut with TSO until fluid flows onto the top of seal. Install pump rod cover (107).

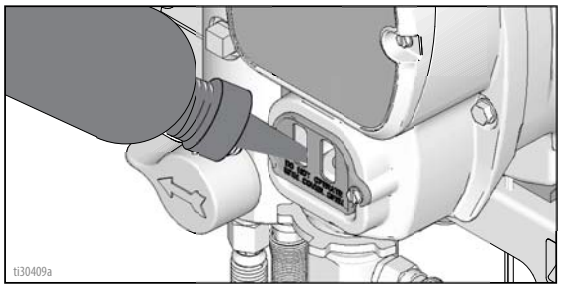

Drive Housing and Connecting Rod

Removal

1. Perform **Pressure Relief Procedure**, page 8.
2. Remove screws (32) and front cover (52).
3. Remove pump. Refer to **Displacement Pump**, page 26.
4. Remove four screws (34) from drive housing (43).

NOTICE

Thrust washers may stick to grease inside of drive housing. Do not lose or misplace.

5. Pull connecting rod (29) and lightly tap lower rear of drive housing (43) with plastic mallet to loosen from pinion housing (44). Pull drive housing and connecting rod assembly off pinion housing.
6. Inspect crank (47) and connecting rod (29) for excessive wear and replace parts as needed.

Installation

1. Evenly lubricate inside of bronze bearing (C) in drive housing (43) with high-quality motor oil. Liberally pack top roller bearing (E), lower bearing (D) inside connecting rod (29) with bearing grease.
2. Assemble connecting rod (29) to drive housing (43). Rotate connecting rod to lowest position.
3. Apply grease to washers 46, 49 and 48. Install in order shown.
4. Lubricate gears with 0.26 pint of 110293 grease (supplied with drive housing). Pack grease evenly around gears.
5. Clean mating surfaces of pinion and drive housings.
6. Align connecting rod with crank (47) and carefully align locating pins in drive housing (43) with holes in pinion housing (44). Push drive housing onto pinion housing or tap into place with plastic mallet.

NOTICE

DO NOT use drive housing screws (34) to align or seat bearing housing with drive housing. Align these parts with locating pins to avoid premature bearing wear.

7. Install screws (34) in drive housing. Torque evenly to note 3 value.
8. Install pump. Refer to **Displacement Pump**, page 26.
9. Install front cover (52) with two screws (32).

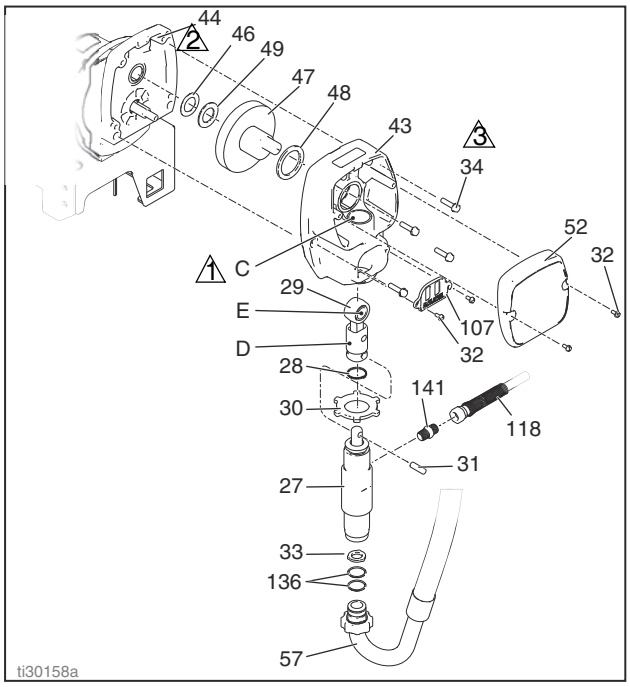

1 Oil
2 Pack with bearing grease 110293
3 Torque to 130-150 in-lb (14-16.9 N•m)

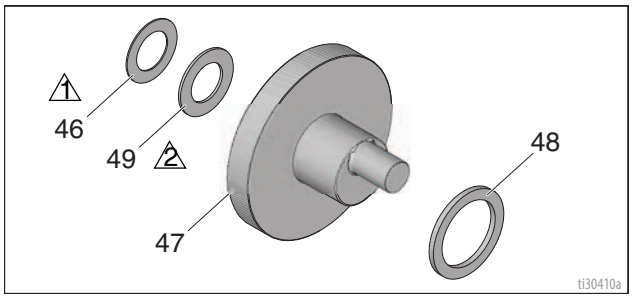

1 Oil
2 Pack with bearing grease 110293

Pinion Assembly/Clutch Armature/Clamp

Pinion Assembly/Clutch Armature Removal

Pinion Assembly

If pinion assembly (44) is not removed from clutch housing (45), do 1. through 3. Otherwise, start at 4.

1. Remove drive housing. Refer to **Drive Housing and Connecting Rod**, page 28.
2. Disconnect clutch (+) and clutch (-) connectors from wire harness located under sprayer cart.
3. Remove four screws (34) and pinion assembly (44).

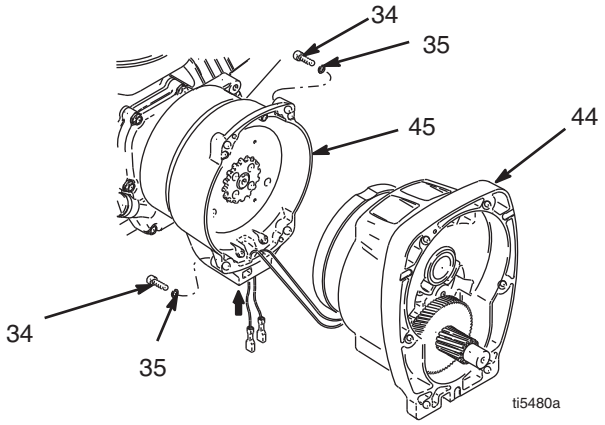

4. Place pinion assembly (44) on bench with rotor side up.
5. Remove four screws (42) and lock washers (35). Install two screws in threaded holes (E) in rotor. Alternately tighten screws until rotor comes off.

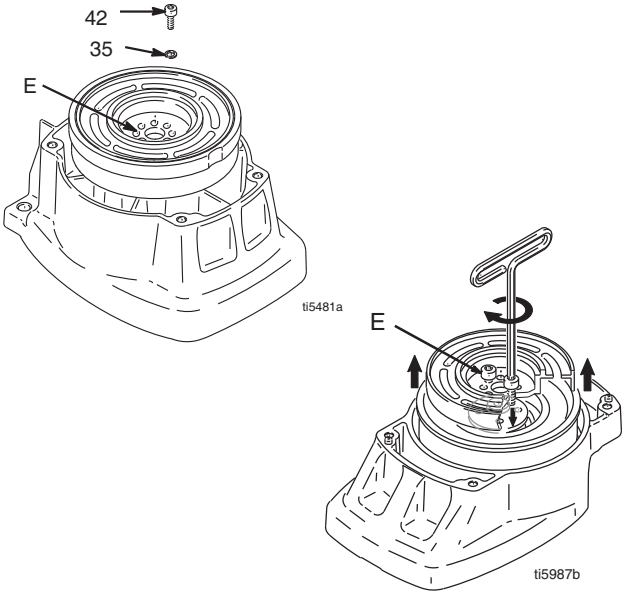

6. Remove retaining ring (44d).
7. Turn pinion assembly over and tap pinion shaft (44c) out with plastic mallet.

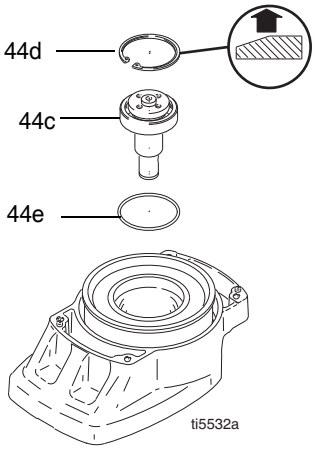

Clutch Armature

8. Use an impact wrench or wedge something between clutch armature (39) and clutch housing to hold engine shaft during removal.
9. Remove four screws (36) and lock washers (35).
10. Remove armature (39).

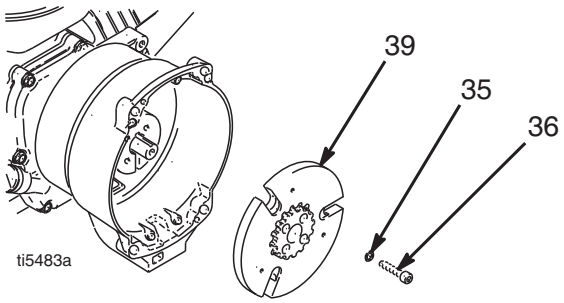

Installation

Clutch Armature

1. Lay two stacks of two dimes on smooth bench surface.
2. Lay armature (39) on two stacks of dimes.
3. Press center of hub (40) down to bench surface.

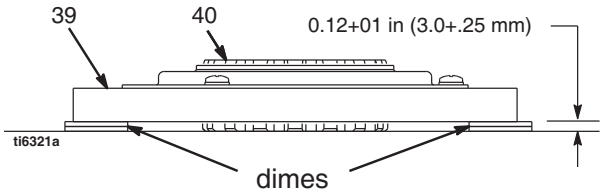

4. Install armature (39) on engine drive shaft.
5. Install four screws (36) and lock washers (35) with torque of 125 in-lb.

Pinion Assembly

1. Check o-ring (44e) and replace if missing or damaged.
2. Tap pinion shaft (44c) in with plastic mallet.
3. Install retaining ring (44d) with beveled side facing up.
4. Place pinion assembly on bench with rotor side up.
5. Apply blue thread locking liquid to screws. Install four screws (42) and lock washers (35). Alternately torque screws to 125 in-lb until rotor is secure. Use threaded holes to hold rotor.
6. Install pinion assembly (44) with four screws (34) and washers (35).
7. Connect clutch cable connectors to inside of pressure control.

Clamp Removal

1. Remove engine. See **Engine Removal**, page 33.
2. Drain gasoline from tank according to Briggs & Stratton manual.
3. Tip engine on side so gas tank is down and air cleaner is up.
4. Loosen two screws (36) on clamp (38).
5. Push screwdriver into slot in clamp (38) and remove clamp.

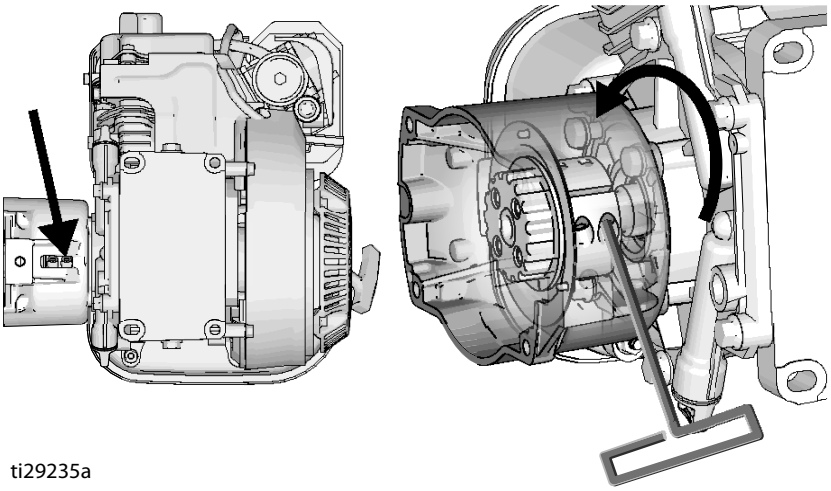

Clamp Installation

1. Install engine shaft key (37).
2. Tap clamp (38) onto engine shaft (A). Maintain dimension shown note 2. Chamfer must face engine.
3. Check dimension: Place rigid, straight steel bar (B) across face of clutch housing (45). Use accurate measuring device to measure distance between bar and face of clamp. Adjust clamp as necessary. Torque two screws (36) to 125 ±10 in-lb (14 ±1.1 N•m).

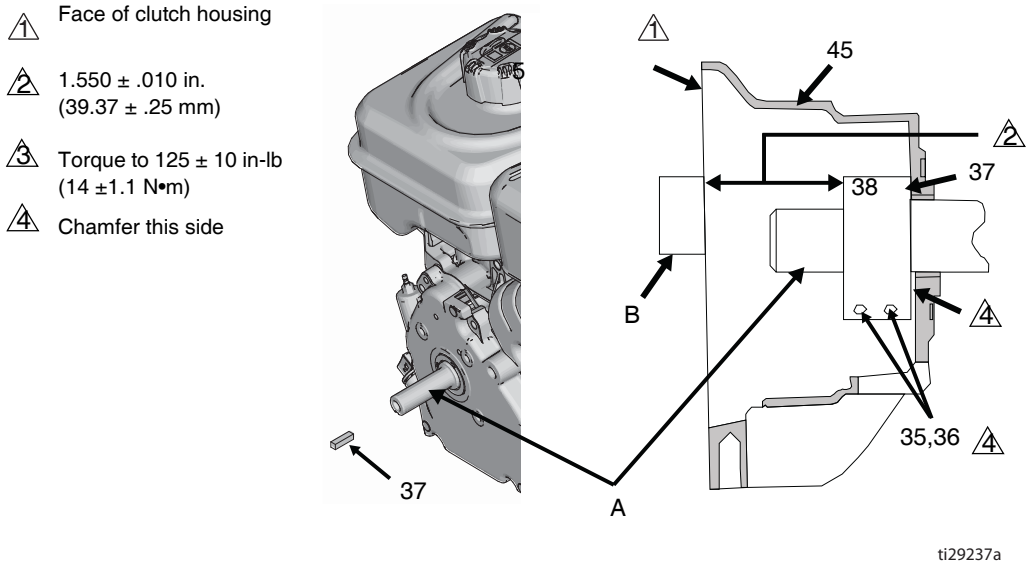

Clutch Housing

Removal

1. Remove clamp. Perform **Clamp Removal**, page 31.
2. Remove four screws (51) and lock washers (50) that hold clutch housing (45) to engine.
3. Remove screw (145) from under mounting plate.
4. Pull off clutch housing (45).

Installation

1. Push on clutch housing (45).
2. Install four cap screws (51) and lock washers (50) and secure clutch housing (45) to engine. Torque to 200 in-lb (22.6 N•m).
3. Install screw (145) from beneath mounting plate. Torque to 26 ft-lb (35.2 N•m).

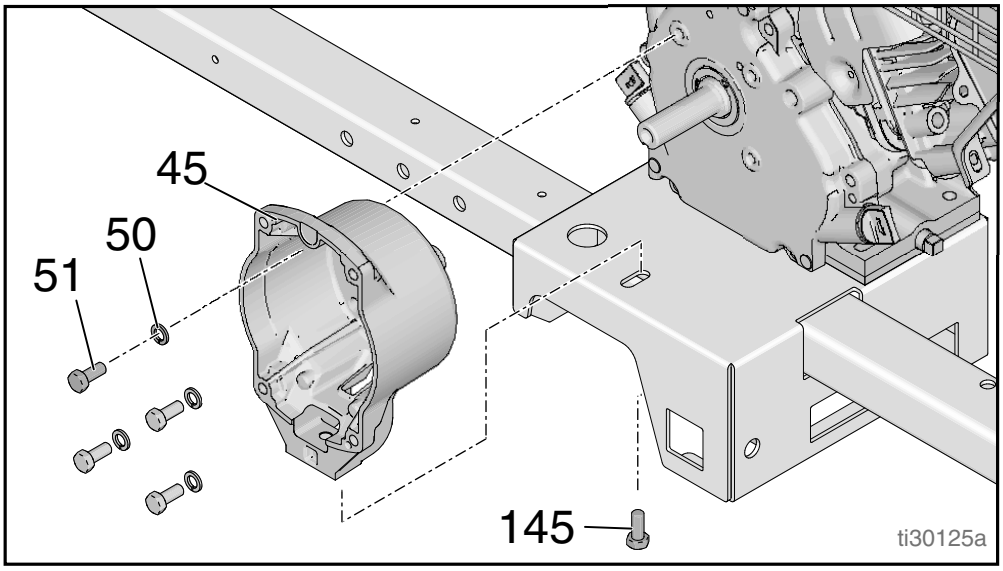

Engine

Removal

NOTE: All service to the engine must be performed by a Briggs & Stratton authorized service dealer.

1. Disconnect all necessary wiring.
2. Remove two lock nuts (111) and screws (110) from base engine, and screw (145) from clutch housing (45)
3. Lift engine carefully and place on work bench.
4. Perform **Clamp Removal**, page 31, and **Clutch Housing Removal**, page 32.

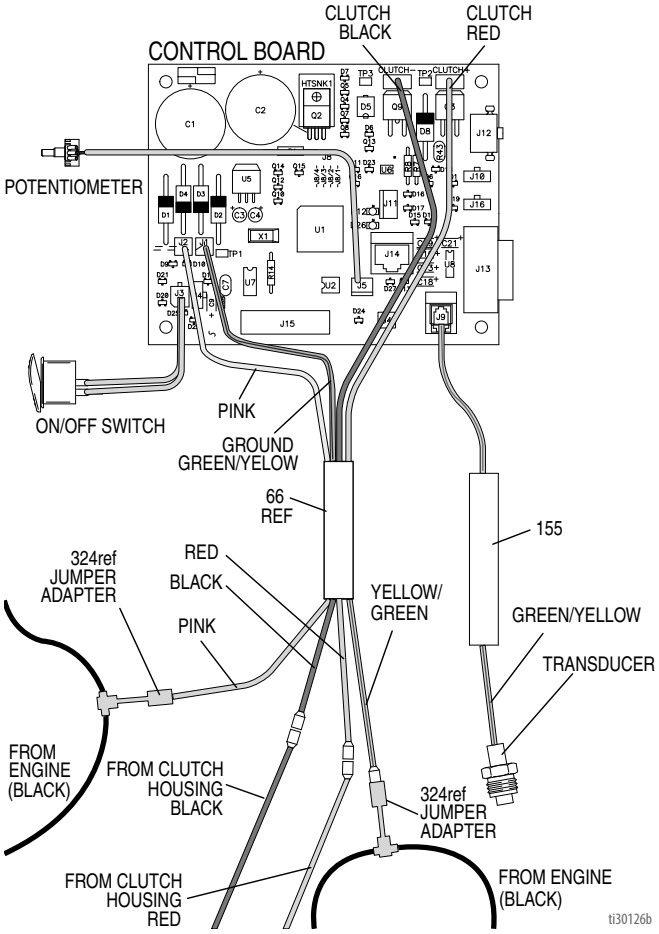

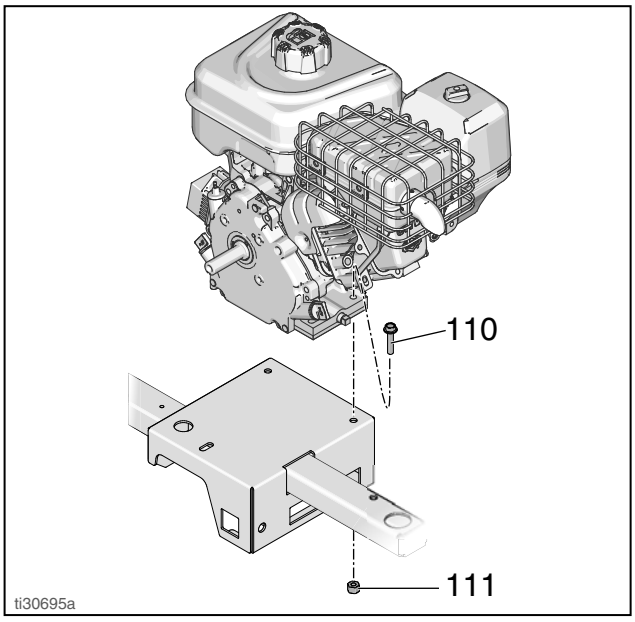

Installation

1. Lift engine carefully and place on cart.
2. Install two screws (110) in base of engine and secure with lock nuts (111). Torque to 20 ft-lb (27.12 N•m),
3. Connect all necessary wiring.
4. Install **Clutch Housing**, page 32, and **Pinion Assembly/Clutch Armature/Clamp**, page 29.

Pressure Control Transducer

Removal

1. Remove two screws (32) and open cover (62a).
2. Disconnect transducer (155) cable from control board (62e).
3. Pull transducer connector through strain relief bushing (151).
4. Remove transducer and o-ring (99) from filter housing (67).

Installation

1. Install o-ring (99) and transducer (155) in filter housing (67). Torque to 35 - 45 ft-lb.
2. Install transducer connector and strain relief bushing in control housing.
3. Connect cable (155) to control board (62e).
4. Close cover (62a) and secure with two screws (32).

Pressure Control (On/Off Switch)

Removal

1. Remove two screws (32) and open cover (62a).
2. Disconnect ON/OFF switch connector from pressure control board (342).
3. Press in on two retaining tabs on each side of ON/OFF switch (62d) and remove switch from cover.

Installation

1. Install new ON/OFF switch (62d) so tabs of switch snap into place on inside of cover.
2. Connect ON/OFF switch connector (B) to pressure control board.
3. Close cover (62a) and secure with two screws (32).

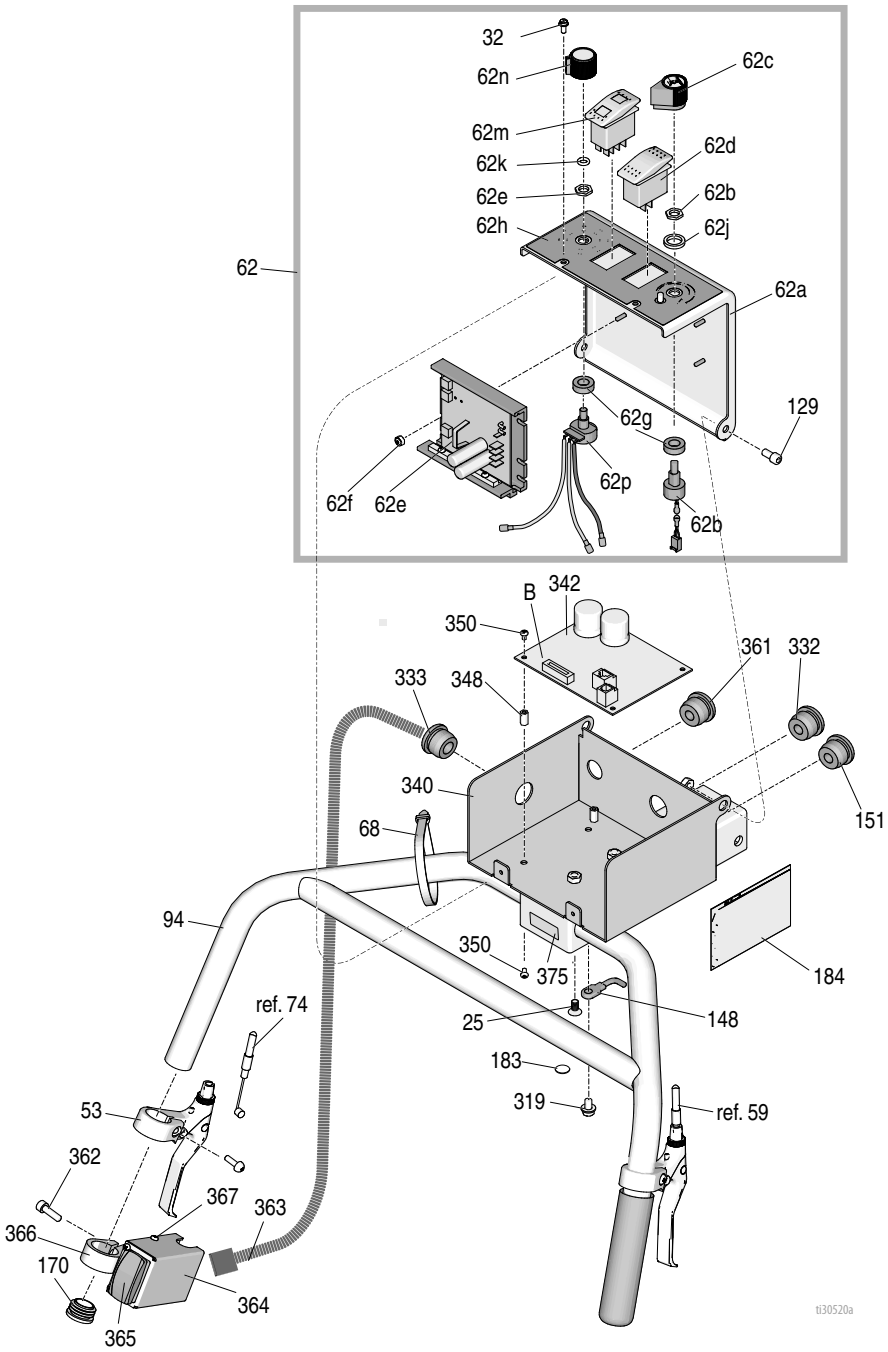

Pressure Adjust Potentiometer

Removal

1. Remove two screws (32) and open cover (62a).
2. Disconnect potentiometer (62b) cable from control board (62e).
3. Loosen set screws on potentiometer knob (62c) and remove knob, shaft nut, lock washer and potentiometer (62b).
4. Remove spacer (62g) from potentiometer.

Installation

1. Install spacer (62g) on potentiometer (62b).
2. Install potentiometer, shaft nut, lock washer and potentiometer knob (62c).
   a. Turn potentiometer shaft clockwise to internal stop. Assemble potentiometer knob (62c) to touch pin on cover (62a).
   b. After adjustment of step a., tighten both set screws in knob 1/4 to 3/8 turn after contact with shaft.
3. Connect potentiometer (62b) cable to control board (62e).
4. Close cover (62a) and secure with two screws (32).

Control Board

Removal

1. Remove two screws (32) and open cover (62a).
2. Disconnect engine wires from wire harness (66).
3. Disconnect at control board (62e):
   - Cable from potentiometer (62b)
   - Cable from transducer (155)
   - Cable from ON/OFF switch (62d)
   - Clutch wires
4. Remove four screws (350) and control board (342).

Installation

1. Install control board (342) with four screws (350).
2. Connect at control board (342):
   - Clutch wires
   - Cable from ON/OFF switch (62d)
   - Cable from transducer (155)
   - Cable from potentiometer (62b)
3. Connect engine wires.
4. Close cover (62a) and secure with two screws (32).

Battery

Removal

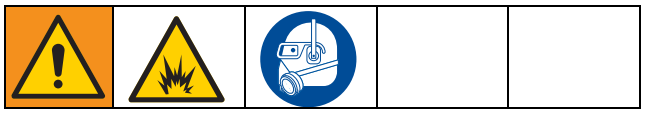

1. Shut off engine, turn off the self-propelled drive system, switch to neutral and engage the parking brake.

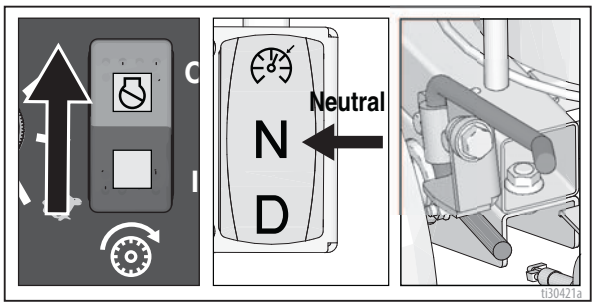

2. Remove battery cover (323).

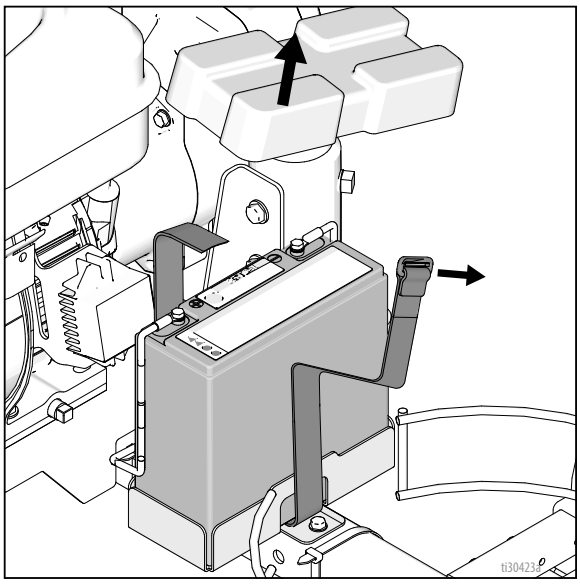

3. Unscrew M5 terminal screws (358) to disconnect battery from wire harness.

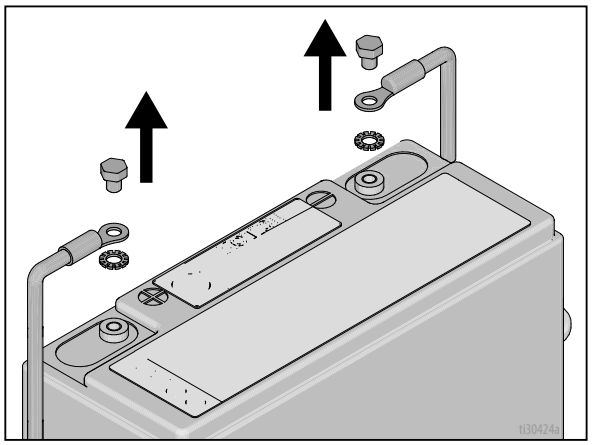

4. Remove battery (321) from bracket (320).

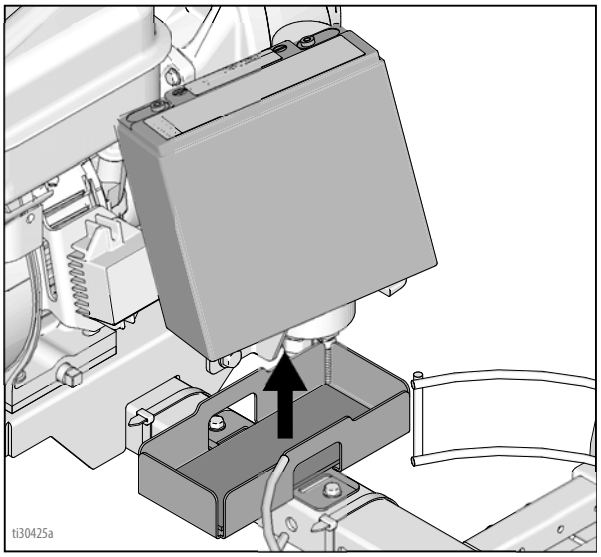

Installation

1. Place battery (321) into bracket (320) and connect the red wire to the positive terminal and the black wire to the negative terminal.

NOTICE
DO NOT reverse the positive and negative battery wires. This will damage the motor control board.

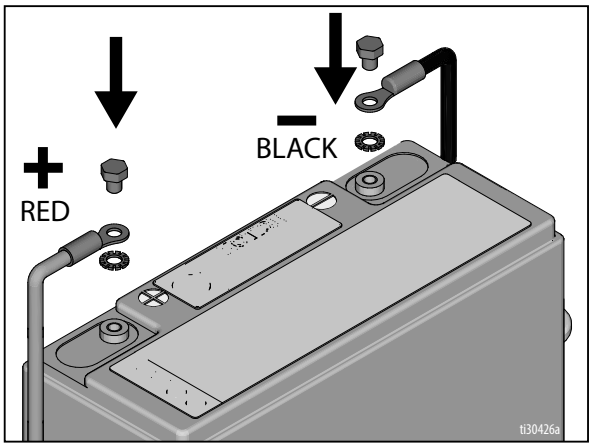

2. Place battery cover (323) and secure with strap (322).

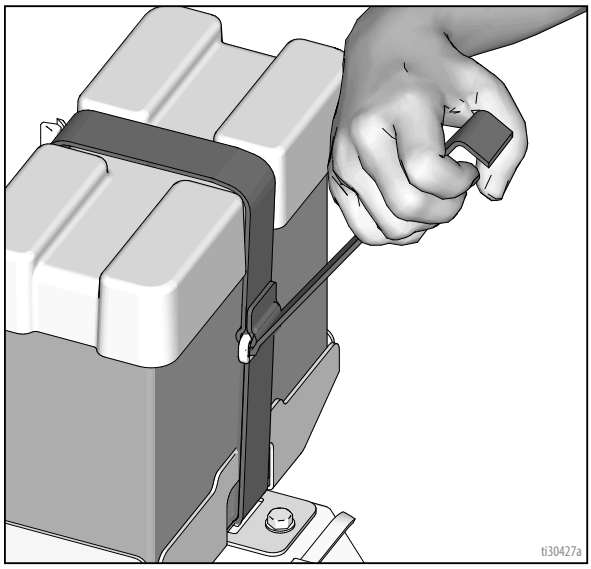

Drive Motor

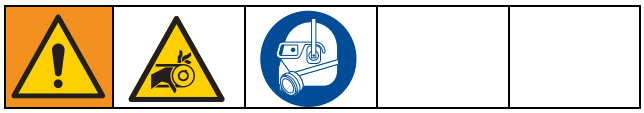

Removal

1. Shut off engine, turn off self-propelled drive system, switch to neutral and engage the parking brake.

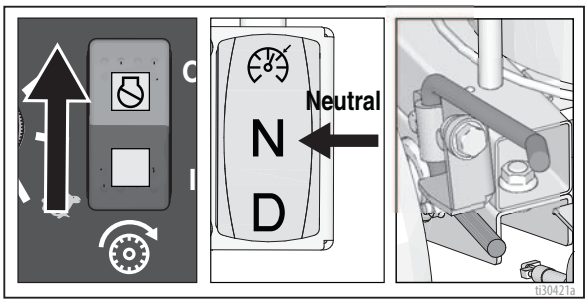

2. Disconnect battery (321) or remove fuse near battery to ensure motor control board (62e) is not powered.

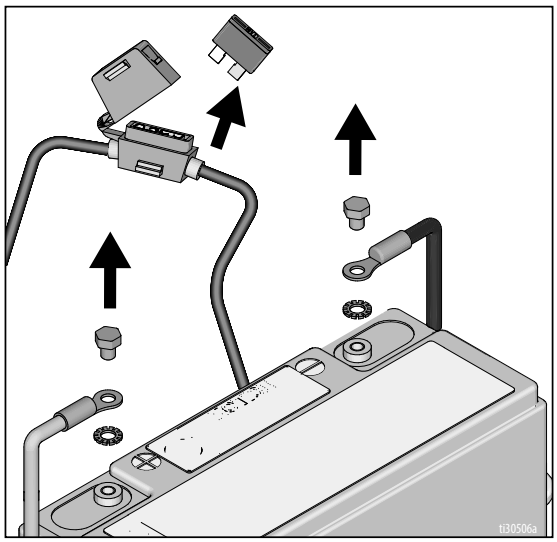

3. Remove the rear chain guard (318).

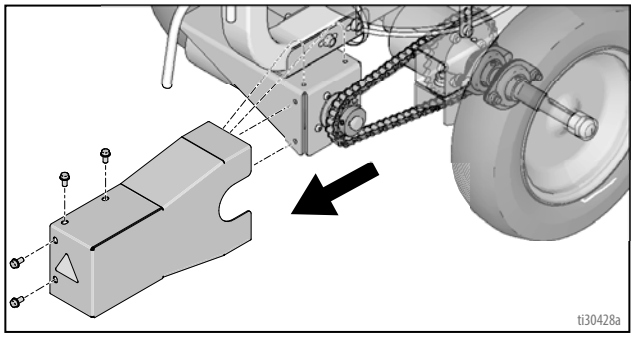

4. Remove the strain relief bushing (361) from the control box so that the motor wires run through, then open the control box cover (62a) and disconnect the red motor wire from the motor control board and the black motor wire from the blue wire that runs up to the handlebar switch (330).

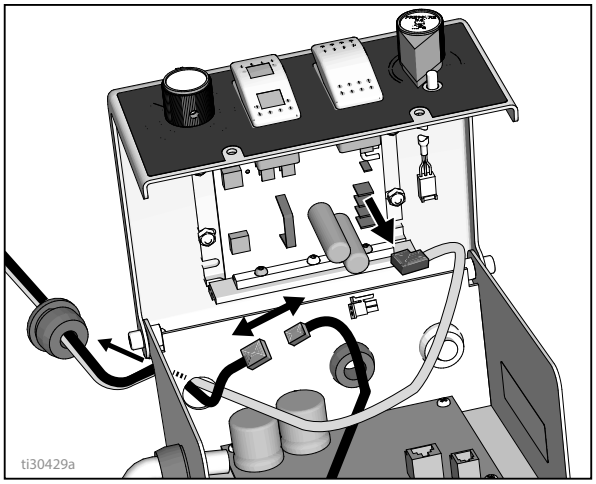

5. Loosen the two bolts (314) that secure the motor mount to the frame and slide the motor completely forward to loosen the chain (316). Loosen the two set screws on the motor sprocket (313).

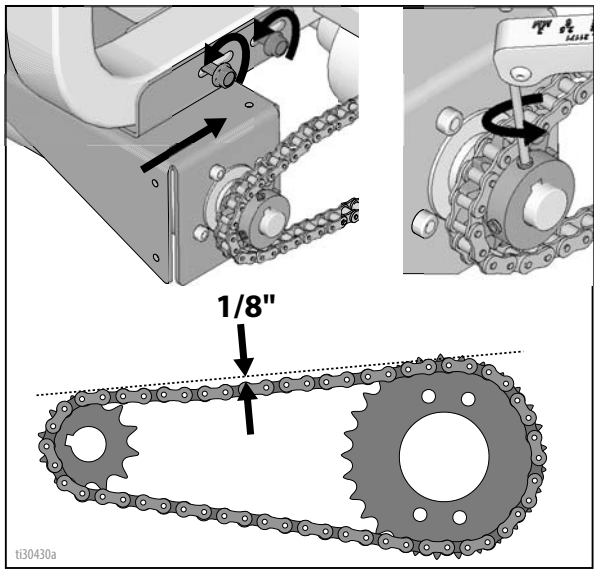

6. Remove the four screws (312) that secure the motor in the motor bracket (310) and slide the sprocket off of the motor shaft while removing the motor (311).

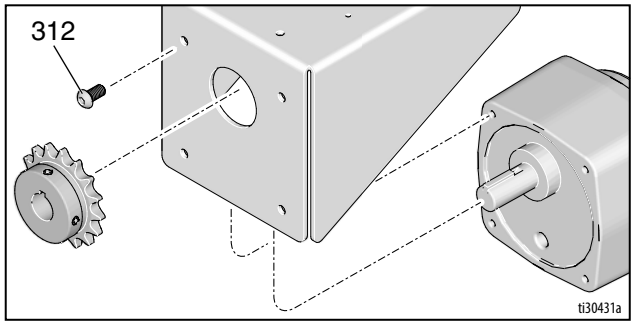

Installation

1. Place a drop of blue thread locking liquid on the threads of each of the four motor screws (312).

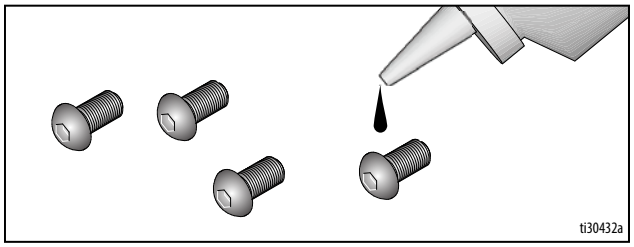

2. With the motor sprocket (313) already placed into the chain (316), slide the sprocket onto the motor shaft while placing the motor (311)into the motor bracket (310), and secure the motor to the motor bracket with four screws (312). Torque to 50-60 in-lb (5.6-6.8 N·m).

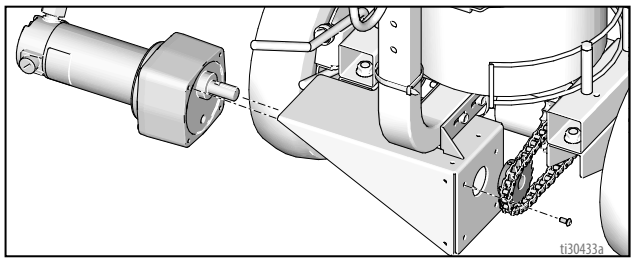

3. Slide the motor bracket (310) back to leave about 1/8” slack in the chain (316), and tighten the motor mount bolts (314). Torque to 30-40 ft-lb (41-54 N·m).

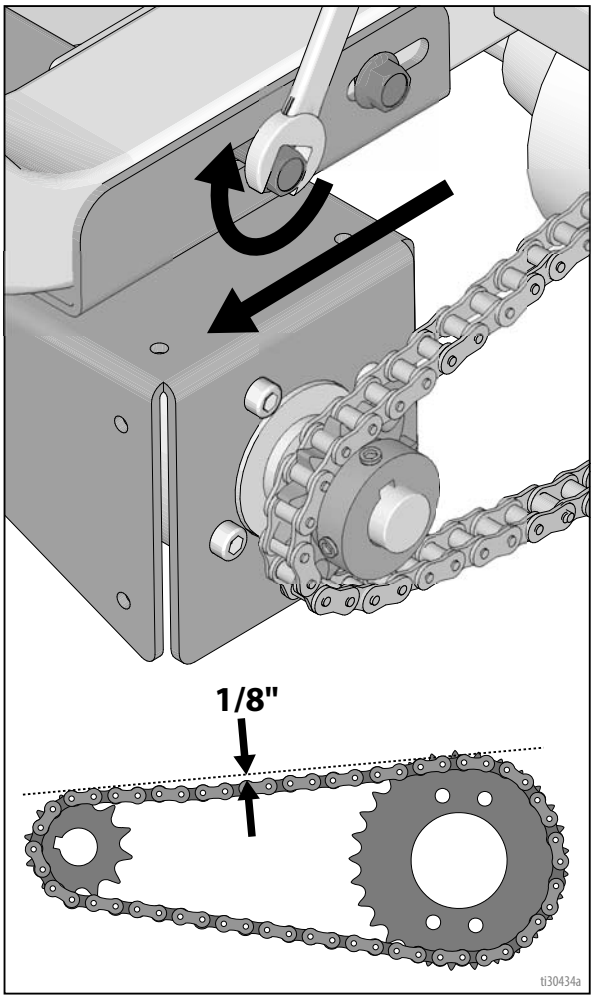

4. Adjust the motor sprocket (313) so that it is in-line with the axle sprocket, then place a drop of blue thread locking liquid onto the threads of each set screw and secure the motor sprocket in place. Torque to 50-60 in-lb (5.6-6.8 N·m).

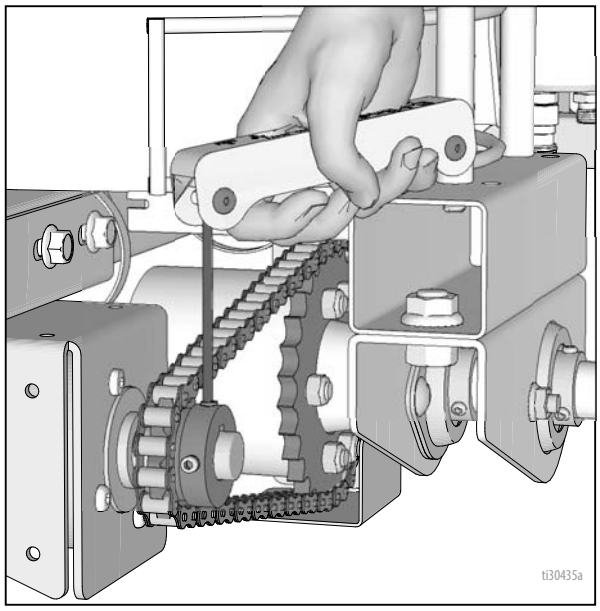

5. Run the motor wires into the control box, reconnect wires, secure wires with strain relief bushing and close the control box cover.

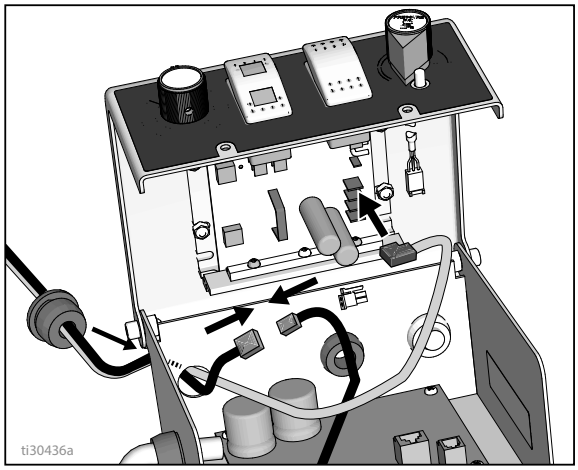

6. Reconnect the battery (321) or replace the fuse. Turn ON the self-propelled drive. With the brake ON and the right wheel securely elevated just enough to be off of the ground, run the drive. If any noise or binding occurs at the chain, realign the motor sprocket (313), or adjust the chain slack.

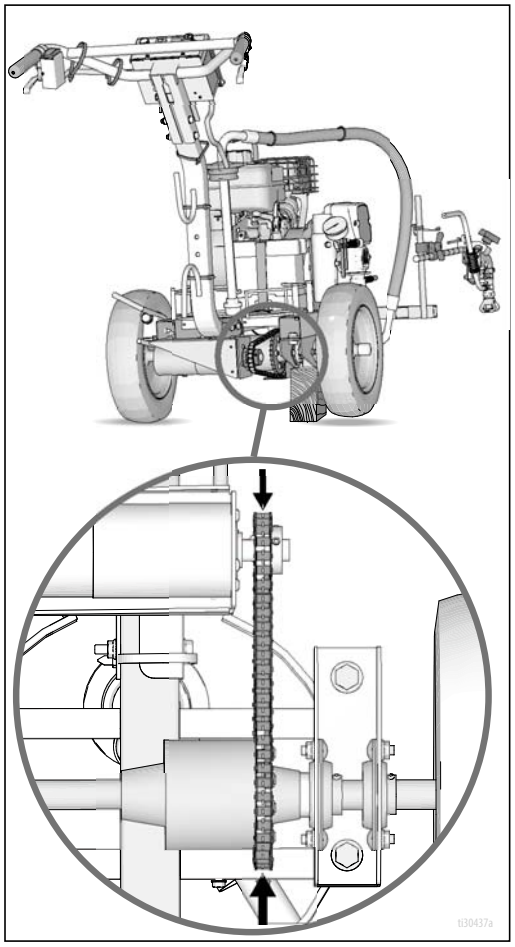

7. Turn OFF the self-propelled drive, place in “N”, and replace the rear chain guard after sprocket alignment is confirmed.

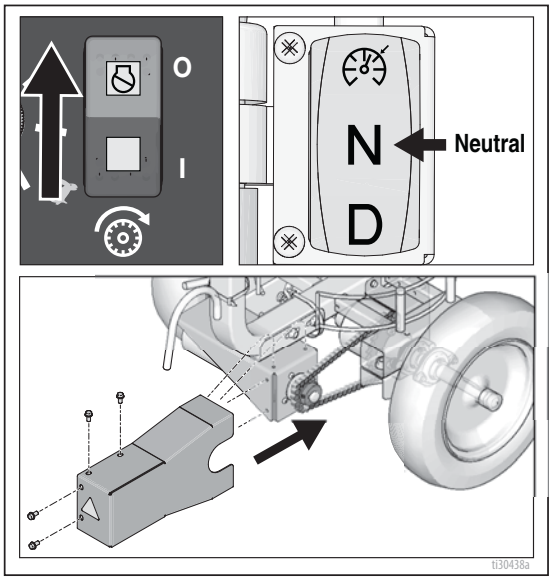

Drive Wheels

Removal

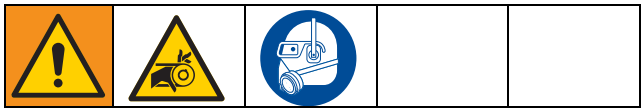

1. Shut off engine and turn off the self-propelled drive system and switch to neutral.

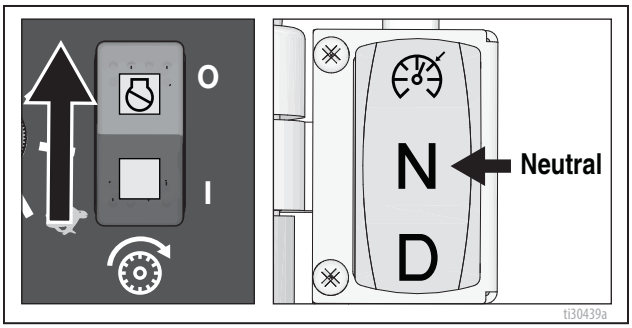

2. Remove bucket or hopper and securely elevate the rear of the striper.

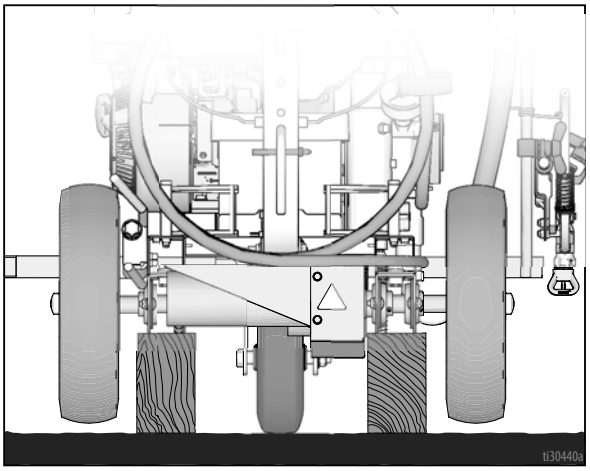

3. While holding the wheel (3) to keep the axle from spinning, loosen and remove the axle nut (307). Slide the wheel off the axle (300) making sure to retain the key (306).

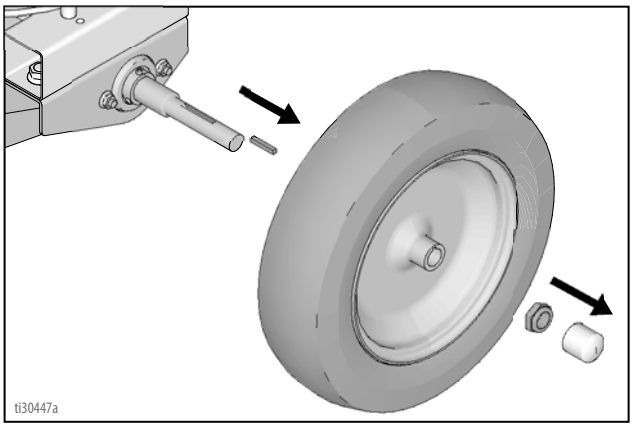

Installation

1. With the key placed into the keyway on the axle, and the keyway on the wheel hub aligned with the key, slide the wheel onto the axle. Install the axle nut and torque to 17-23 ft-lb (23-31 N·m). Replace the axle nut cap (131).

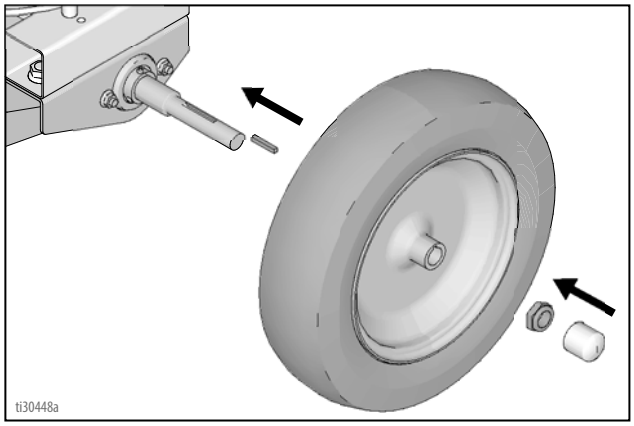

Drive Switch

Removal

1. Shut off engine, turn off self-propelled drive system, switch to neutral and engage the parking brake.

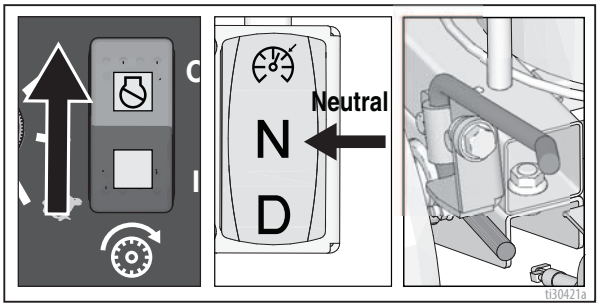

2. Disconnect battery (321) or remove fuse near battery to ensure motor control board (62e) is not powered.

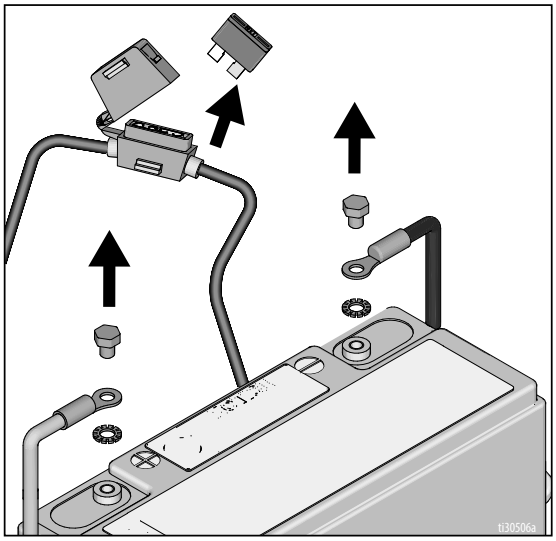

3. Open the control box.

4. Remove the strain relief bushing (333) and disconnect the blue wire from (-A) on the control board and from the black motor wire. Disconnect the white wire from (HI) on the control board (62e) and from the white wire coming from the speed control.

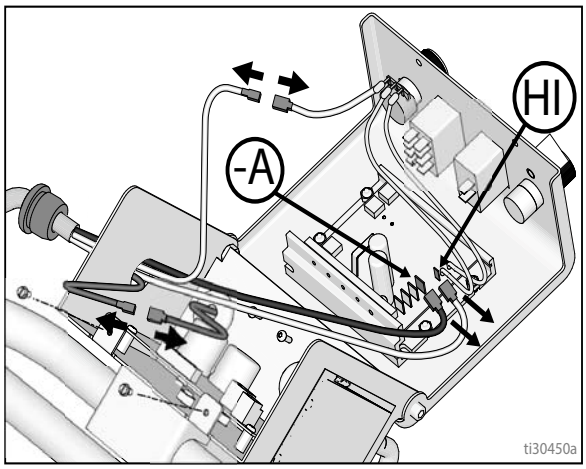

5. Remove the four screws to remove the switch housing, with the switch, from the mount.

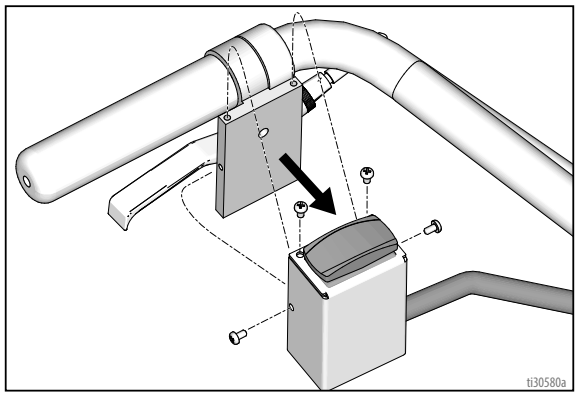

6. Unplug the wire harness from the switch and remove the drive switch from the housing.

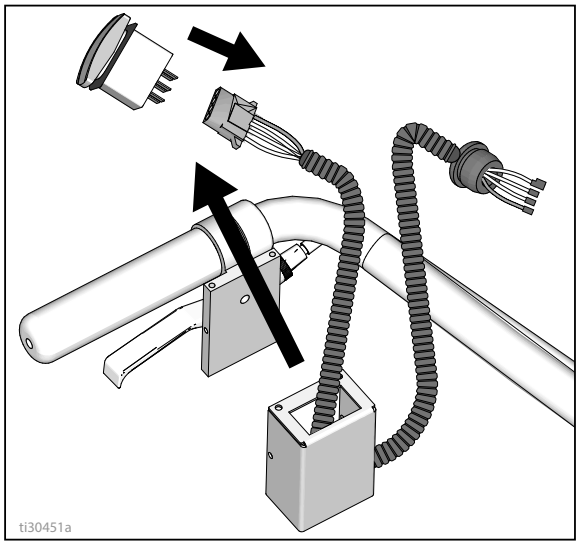

Installation

1. Install the switch into the housing and connect the wire harness to the switch.

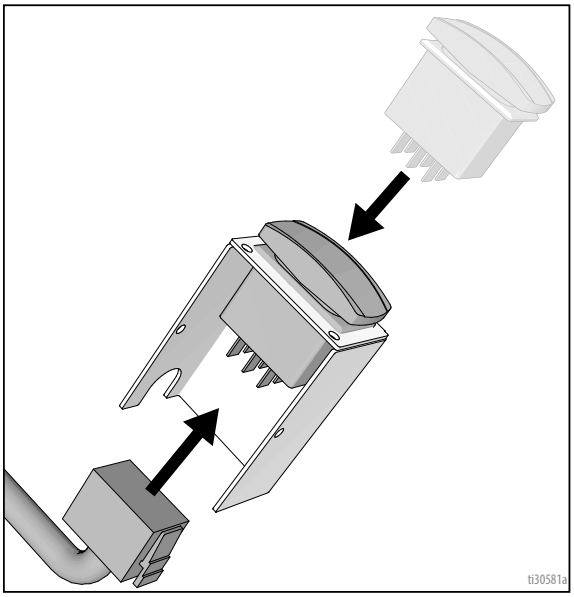

2. Install the four screws to attach the switch and switch housing to the mount.

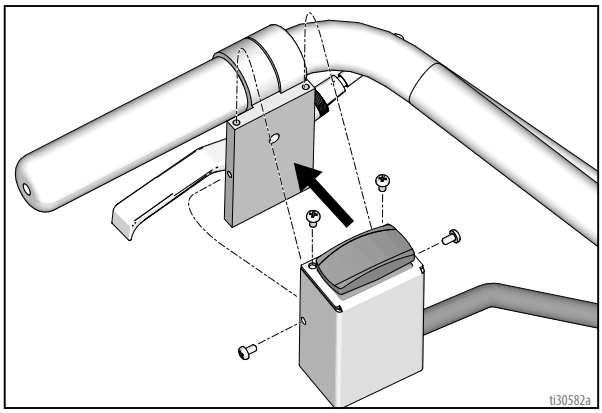

3. Connect blue and white wires to the control board (324), motor and speed control.

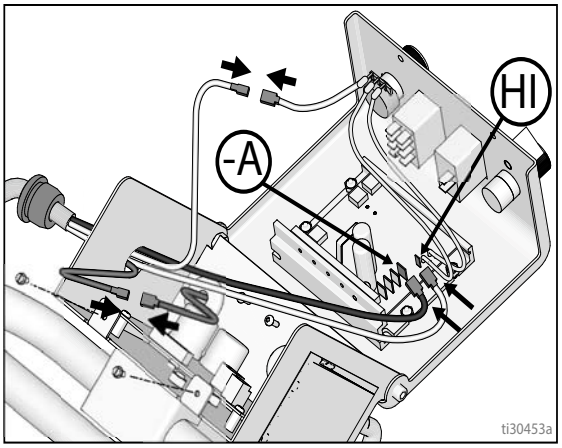

4. Replace the strain relief bushing (333) and close control box cover (62a).

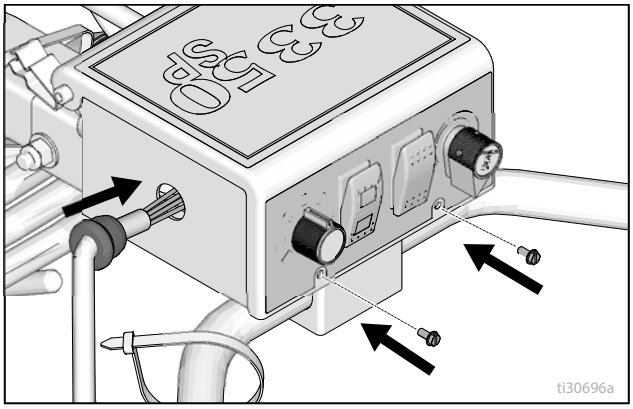

5. With the self-propelled drive system switch in the OFF position, and the drive switch in “N”, connect the battery or insert the fuse.

NOTICE

DO NOT reverse the positive and negative battery wires. This will damage the motor control board.

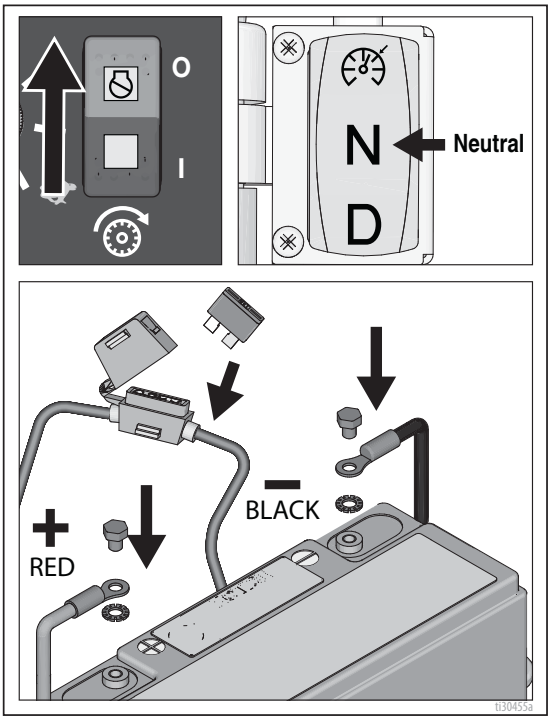

Drive/Axle Bearings

Removal

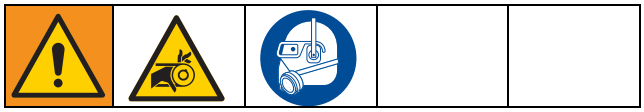

1. Shut off the engine and turn off the self-propelled drive system and switch to neutral.

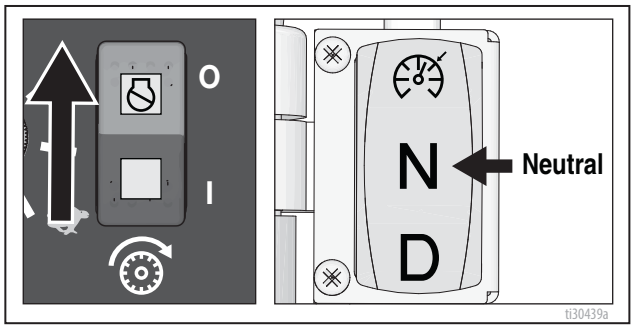

2. Remove bucket or hopper and securely elevate the rear of the striper.

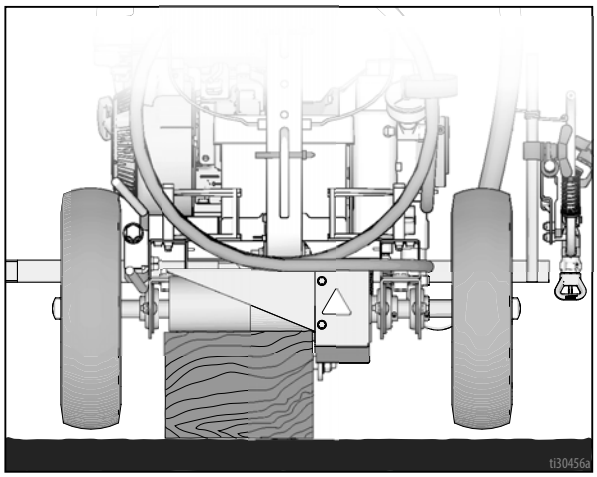

3. While holding the wheel (3) to keep the axle (300) from spinning, loosen and remove the axle nut (307). Slide the wheel off the axle making sure to retain the key (306).

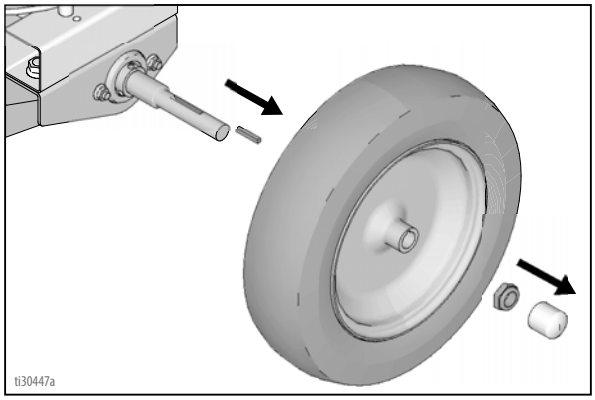

4. Remove the front (317) and rear (318) chain guards.

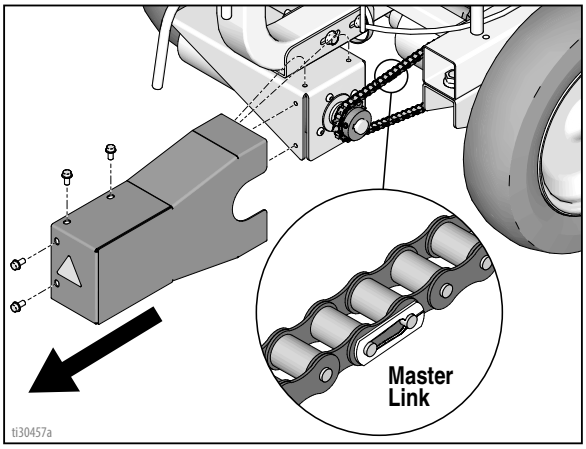

5. Disconnect the master link on the chain and remove the chain (316).

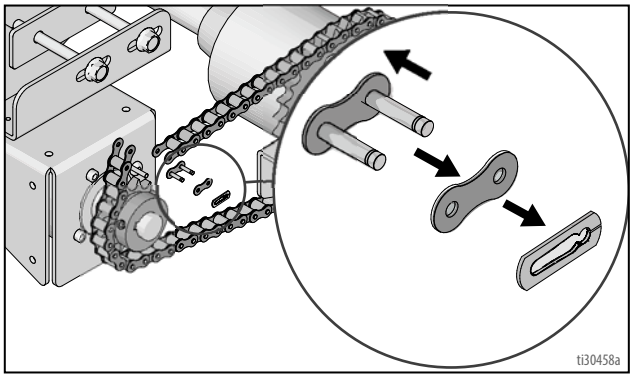

6. Remove the axle bracket nuts (309) and bolts (308) to disconnect the axle assembly from the striper frame.

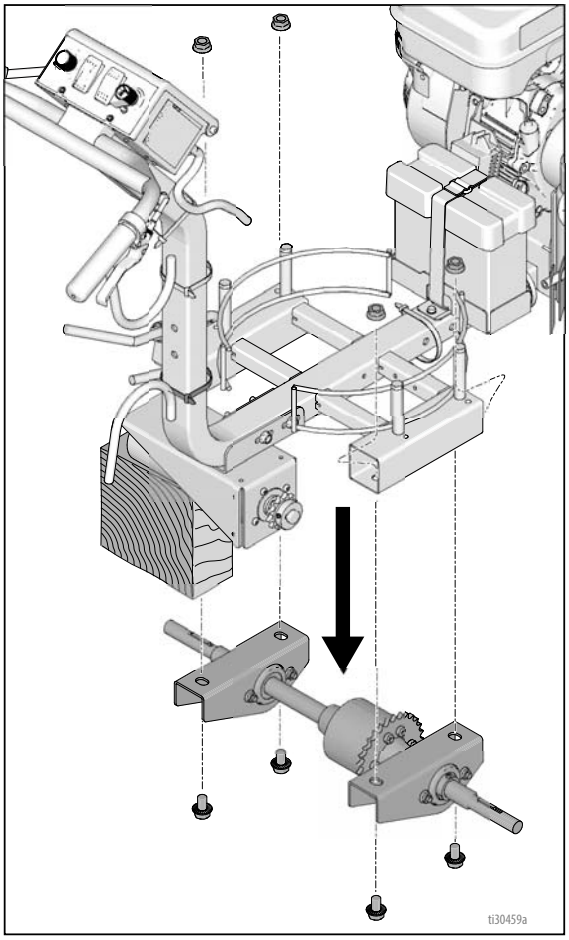

7. Loosen all of the bearing (303) set screws and slide each bracket-bearing assembly off of the axle (300).

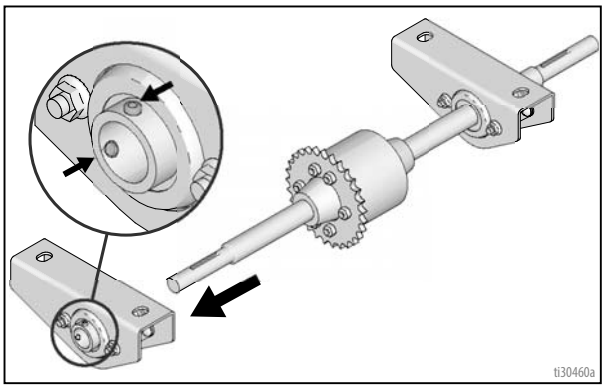

8. If replacing the axle bearings, unbolt each bearing (304 and 305) from the axle bracket (302).

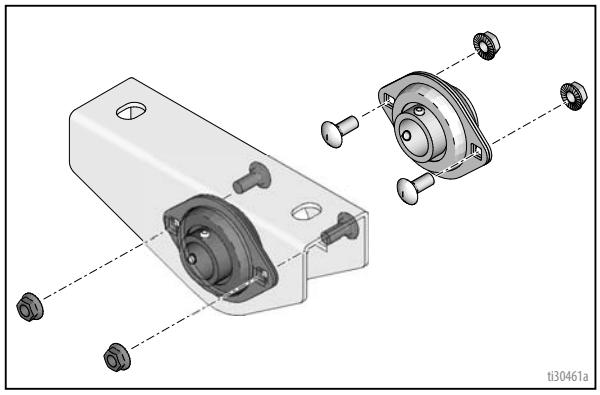

Installation

1. If replacing the axle bearings, bolt each bearing (303) to each axle bracket (302), and only hand tighten nuts (305).

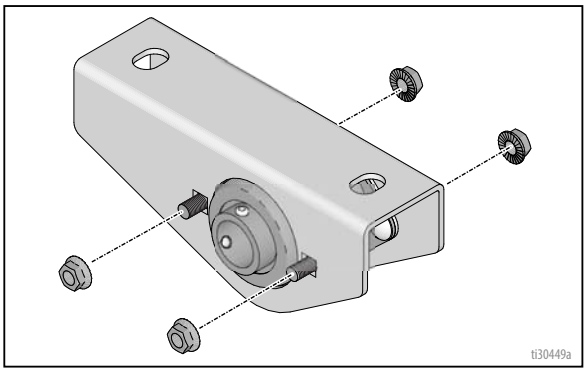

2. Slide each bracket-bearing assembly onto the axle, but do not tighten the bearing set screws.

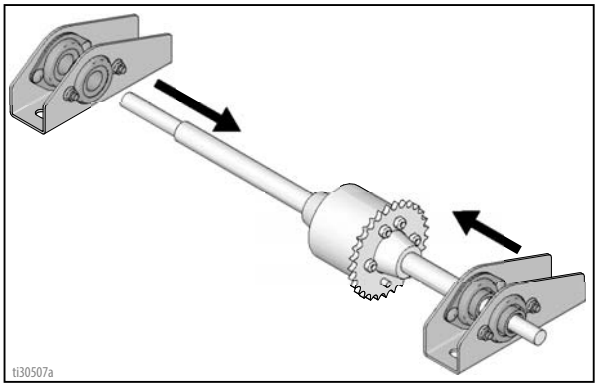

3. Bolt the axle assembly to the frame and torque to 30-40 ft-lb (40.7-54.2 N·m).

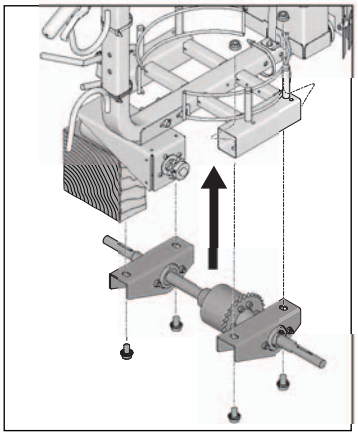

4. If bearings were replaced, torque the nuts (305) and bolts (304) to 23-27 ft-lb (31.2-36.6 N·m).

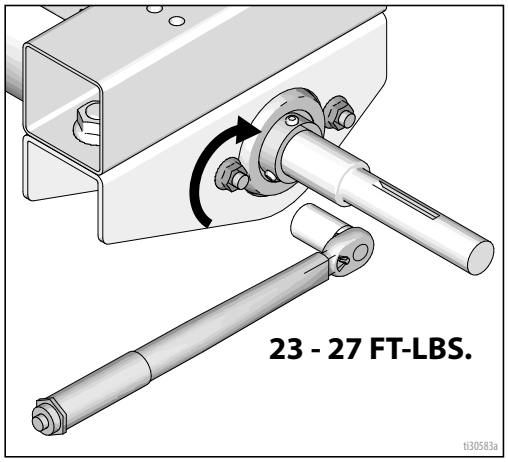

5. Align the axle sprocket with the motor sprocket, place a drop of blue thread locking liquid on each bearing set screw and tighten all set screws.

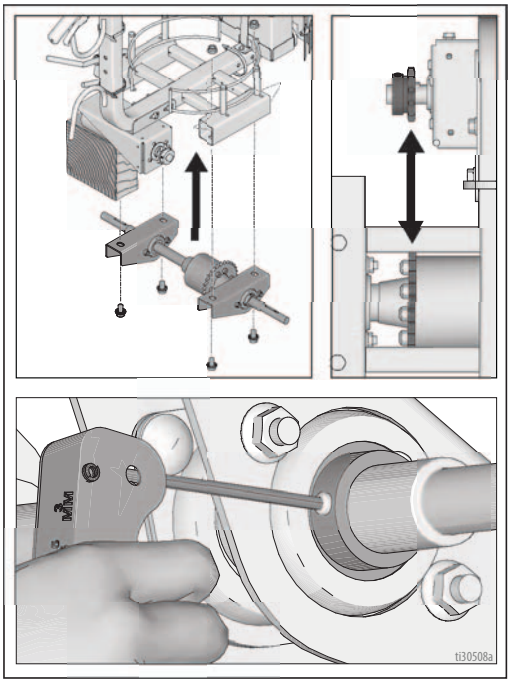

6. Wrap the chain (316) around the axle and motor sprockets and reconnect using the master link. Slight repositioning of the motor may be required.

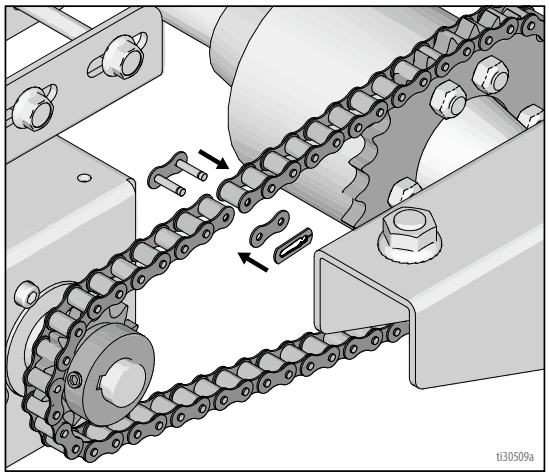

7. With the key (306) inserted into the axle keyway, slide each wheel (3) back onto the axle and secure using the axle nuts (307) and torque to 17-23 ft-lb (23-31 N·m). Replace the axle nut cap (131).

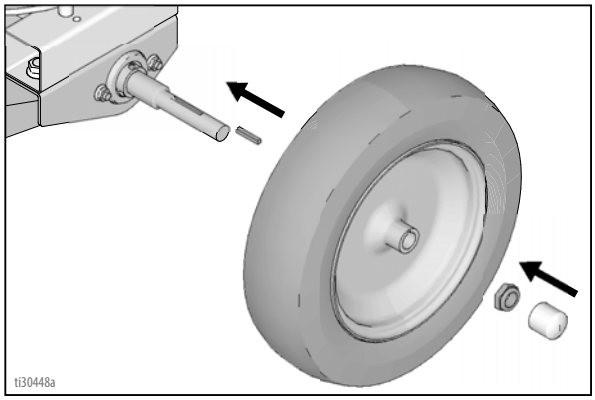

8. Install the front (317) and rear (318) chain guards and lower the striper back to the ground.

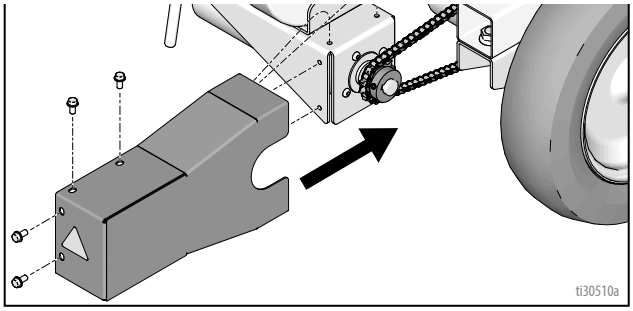

9. Place the bucket or hopper back onto the striper.

Drive Chain

Removal

1. Shut off the engine, turn off the self-propelled drive system, switch to neutral and engage parking brake.

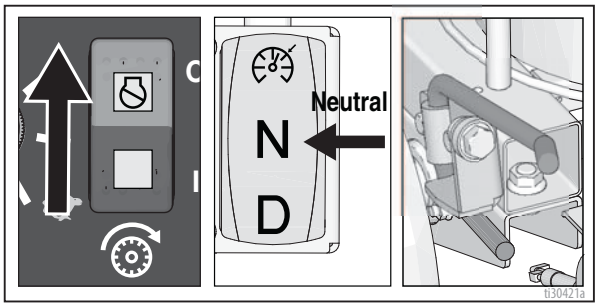

2. Remove the rear chain guard (318). Then rotate the wheel to position the master link as shown.

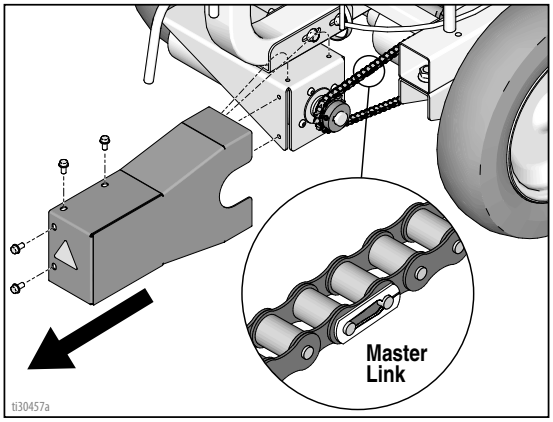

3. Disconnect the master link on the chain and remove the chain (316).

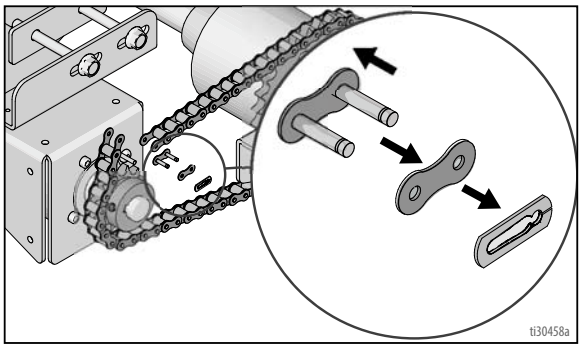

Installation

1. Wrap the chain around the axle and motor sprocket and reconnect using the master link.

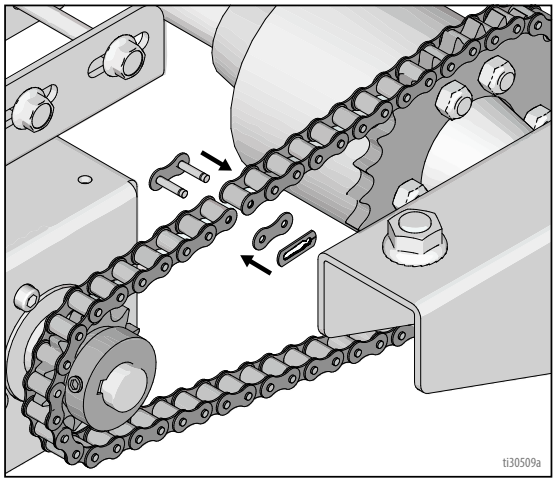

2. If the chain cannot be connected, or the chain slack needs adjusting, loosen the two motor bracket bolts (314) and slide the motor forward or backward as needed. Re-torque to 30-40 ft-lb (41-54 N·m).

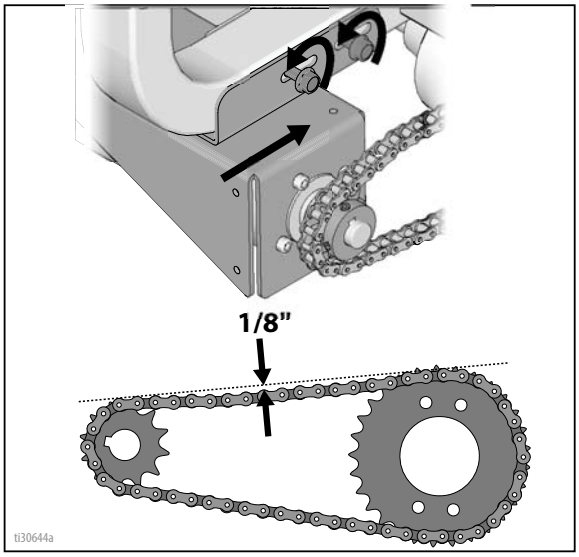

3. Install the rear chain guard (318).

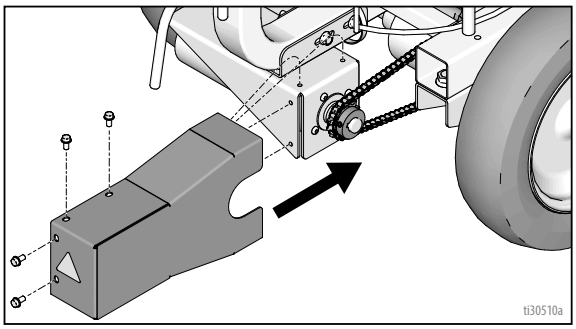

Motor Control Board

Removal

1. Shut off engine, turn off self-propelled drive system, switch to neutral and engage parking brake.

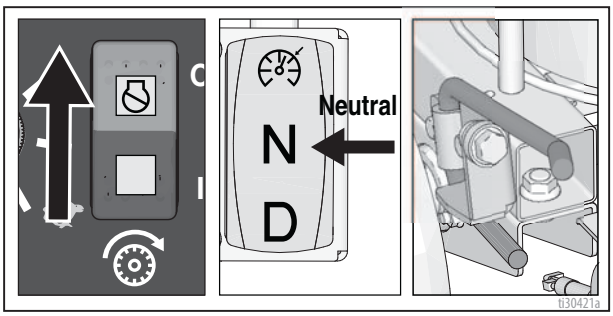

2. Remove the 30 amp fuse from the fuse holder near the battery.

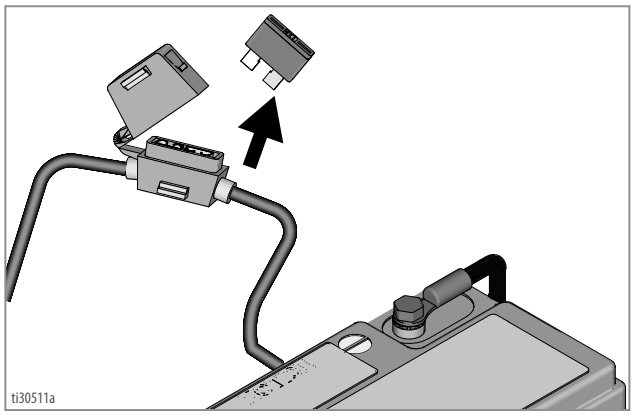

3. Open the control box cover (62a) and carefully disconnect the seven wires that are connected to the male spade terminals and the one white potentiometer wire.

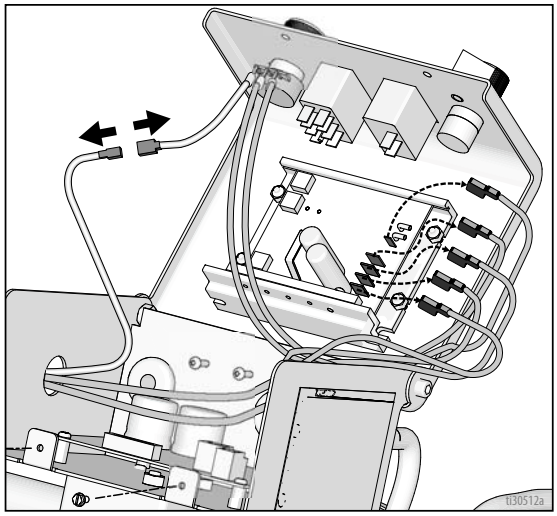

4. Unscrew the 4 mounting nuts (62f) and remove the control board (62e) from the control box cover (62a).

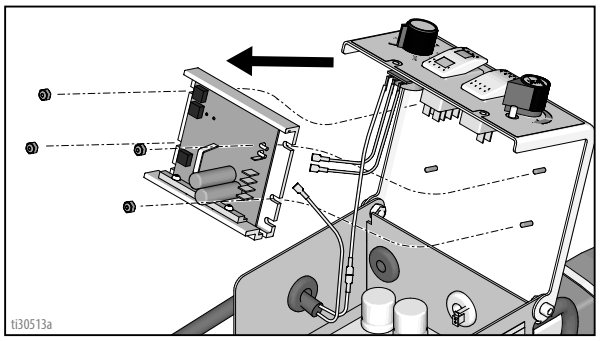

Installation

1. Locate control board (62e) on the four threaded studs in control box cover (62a) and secure using four mounting nuts (62f) torqued to 16-20 in-lb (1.8-2.3 N·m).

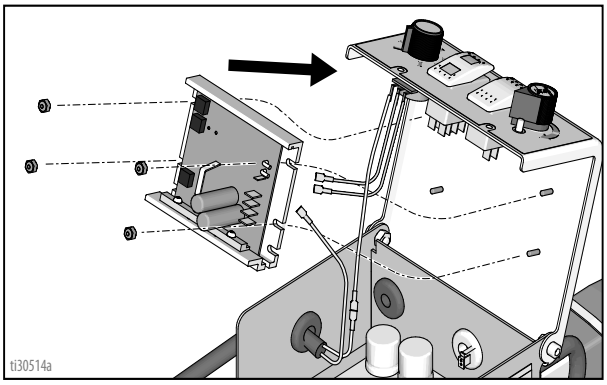

2. Connect the eight wires as shown (as indicated per the wire labels).

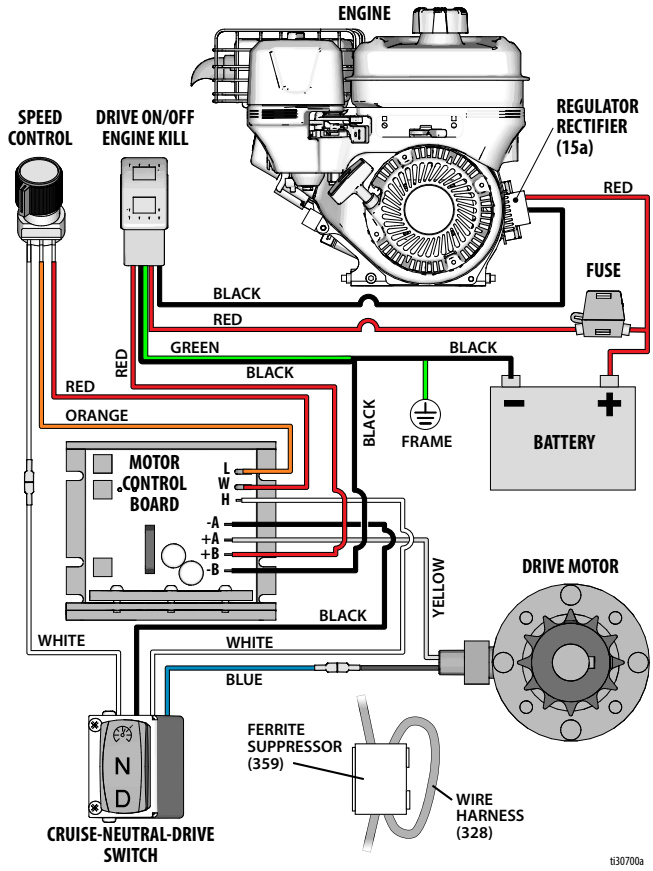

NOTICE

DO NOT reverse the positive and negative battery wires. This will damage the motor control board.

3. Close the control box cover (62a), ensure the drive power switch (62m) is in the OFF position, and reinsert the 30 amp fuse.

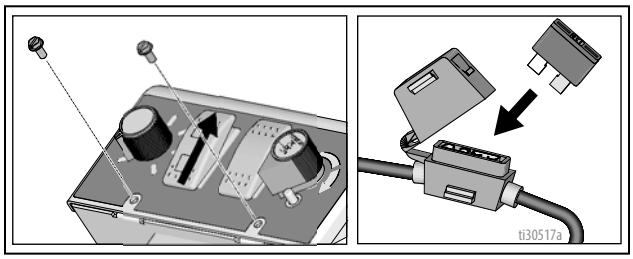

Speed Control

Removal

1. Shut off engine, turn off self-propelled drive system, switch to neutral and engage parking brake.

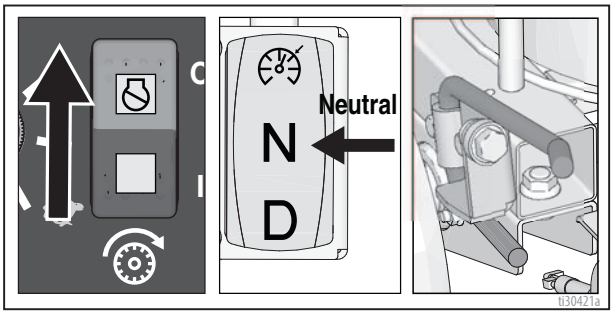

2. Open control box cover (62a) and carefully disconnect three wires.

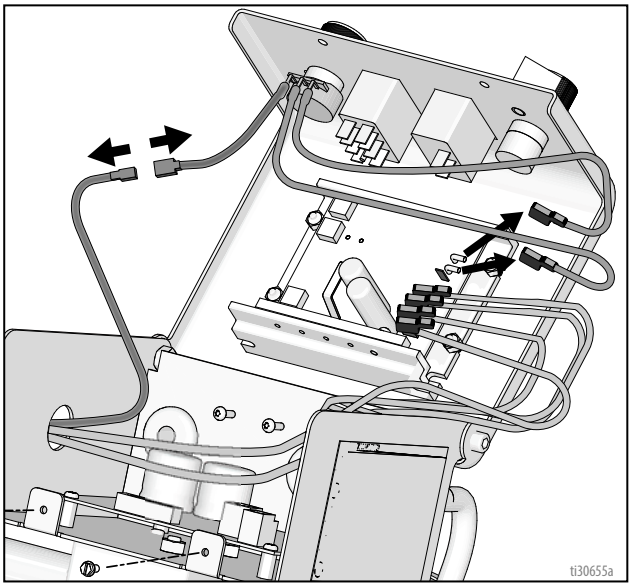

3. Remove the speed knob (62h) using a 5/64” allen wrench, the friction o-ring (62k), the retaining nut, and the spacer (62g).

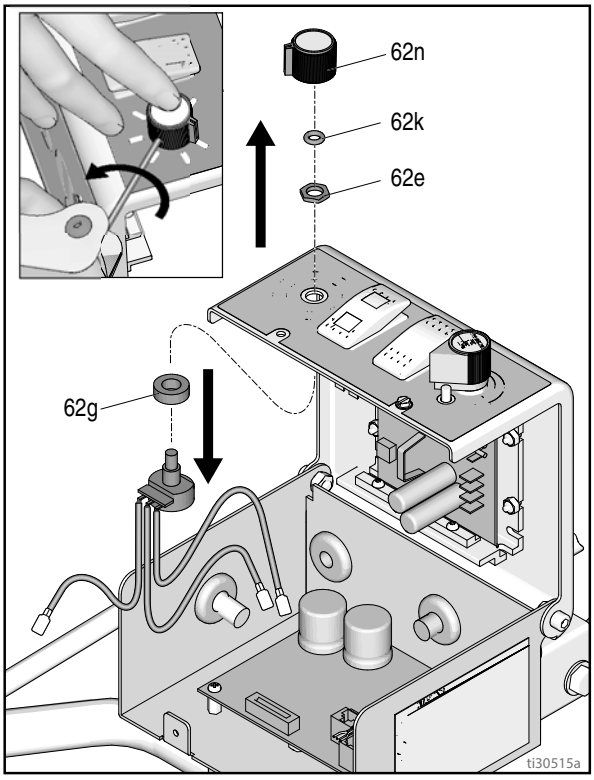

Installation

1. Slide the rubber spacer (62g) onto the speed potentiometer, insert the potentiometer into the hole in the cover (62a), and secure using the retaining nut torqued to 8-11 in-lb (0.9-1.2 N·m), then slide the friction o-ring (62k) onto the stud.
2. Turn the potentiometer stud completely counterclockwise, then place the speed knob (62n) onto the stud. With the indicator aligned with the first tick mark, and while pressing down on the knob, tighten the two setscrews so the knob does not spin on the stud.

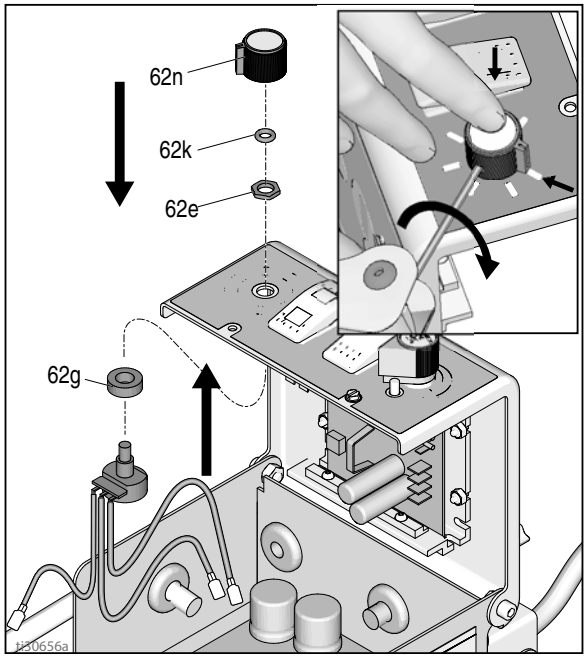

3. Reconnect the three speed control wires. White to the other white wire, orange to “LO,” and red to “WP”.

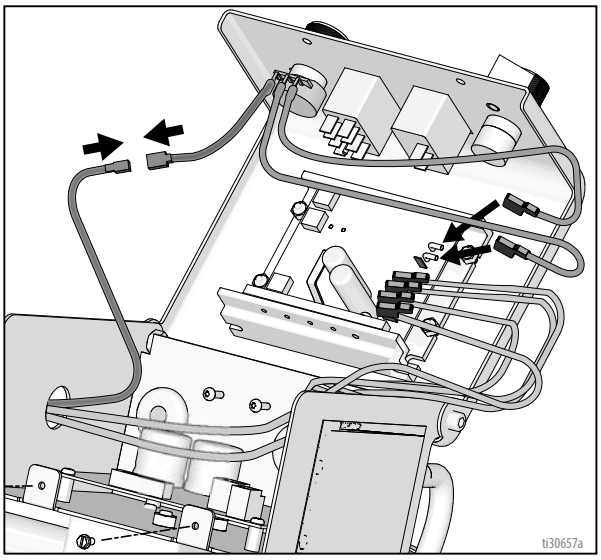

4. Close the control box cover (62a).

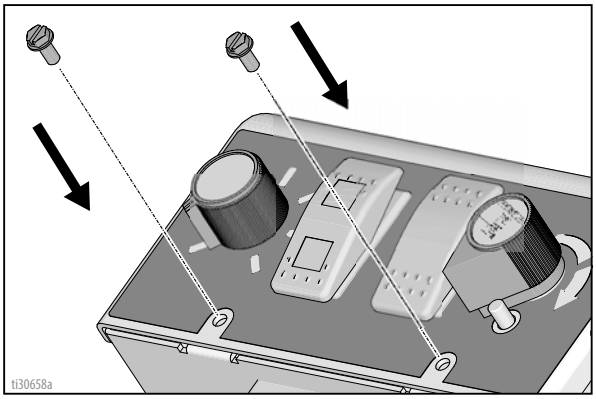

Troubleshooting - Drive System

Does not Drive

Step 1: Drive System turned ON?
- NO → Turn Drive System switch to ON (down position). Green LED should illuminate indicating drive is powered. Green LED on motor control board also indicates board is powered.
- YES ↓

Step 2: Speed knob turned fully clockwise?
- NO → With switch set to cruise ( ), slowly turn Speed Control knob clockwise until unit begins to move.
- YES ↓

Step 3: Handlebar switch in Drive (D) or Cruise ( ) position?
- NO → Press 'D' or Cruise ( ) to test if unit will move.
- YES ↓

Step 4: Does green LED on the Engine Kill/Drive Power Switch remain on continously when put in Drive (D) or Cruise ( ) (i.e. Does not flicker) ?
- NO → Ensure the wire harness is securley connected to the back of the Engine Kill/Drive Power Switch. If issue persists, replace Engine Kill/Drive Power Switch.
- YES ↓

Step 5: Battery installed and connected correctly?
- NO → Install battery and / or ensure it is connected with the red wire to positive (+) and the black wire to negative (—).
- YES ↓

NOTICE
DO NOT reverse the positive and negative battery wires. This will damage the motor control board.

Step 6: Fuse present and NOT blown?
- NO → Install or replace with 30A automotive fuse.
- YES ↓

Step 7: Does the battery have at least 12v?
- NO → Run engine at full RPM to charge battery to at least 13v. Charging voltage is approx. 14.2V

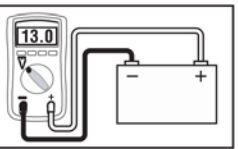

- YES ↓

Step 8: All 7 wires connected to motor control board and 2 wires to wire harness?
- NO → Connect and/or double check for proper wire connections to motor control board. See wiring diagram on page 54.
- YES ↓

Step 9: Is red LED on motor control board illuminated?
- YES → Check for seized or locked drive components preventing motor from spinning. Red LED indicates the control has hit its current limit settings; approx. 20-21A.
- NO ↓

Step 10: Does the Drive Switch have continuity across the two white leads, and across the two blue leads when in ( ) or in 'D'?
- NO → Replace the switch and wire harness.
- YES → **Step 11:** Dissconnect the speed control from control board. Does it have 0 Ω across the orange and red wires when turned fully counterclockwise, or aproximately 5 kΩ when turned fully clockwise, or aproximately 5 kΩ across the red and white wires when turned fully counterclockwise and 0 Ω when turned fully clockwise?
  - NO → Replace the speed control potentiometer.
  - YES → **Step 12:** Does the motor have continuity across the RED and BLACK leads?
    - YES → Replace motor brushes.
    - NO → Replace the motor control board.

ti30518b

Fluid Pump Runs Constantly

1. Perform **Pressure Relief Procedure**, page 8, turn prime valve forward to SPRAY position, and turn power switch OFF.
2. Remove control box cover.

Troubleshooting Procedure:

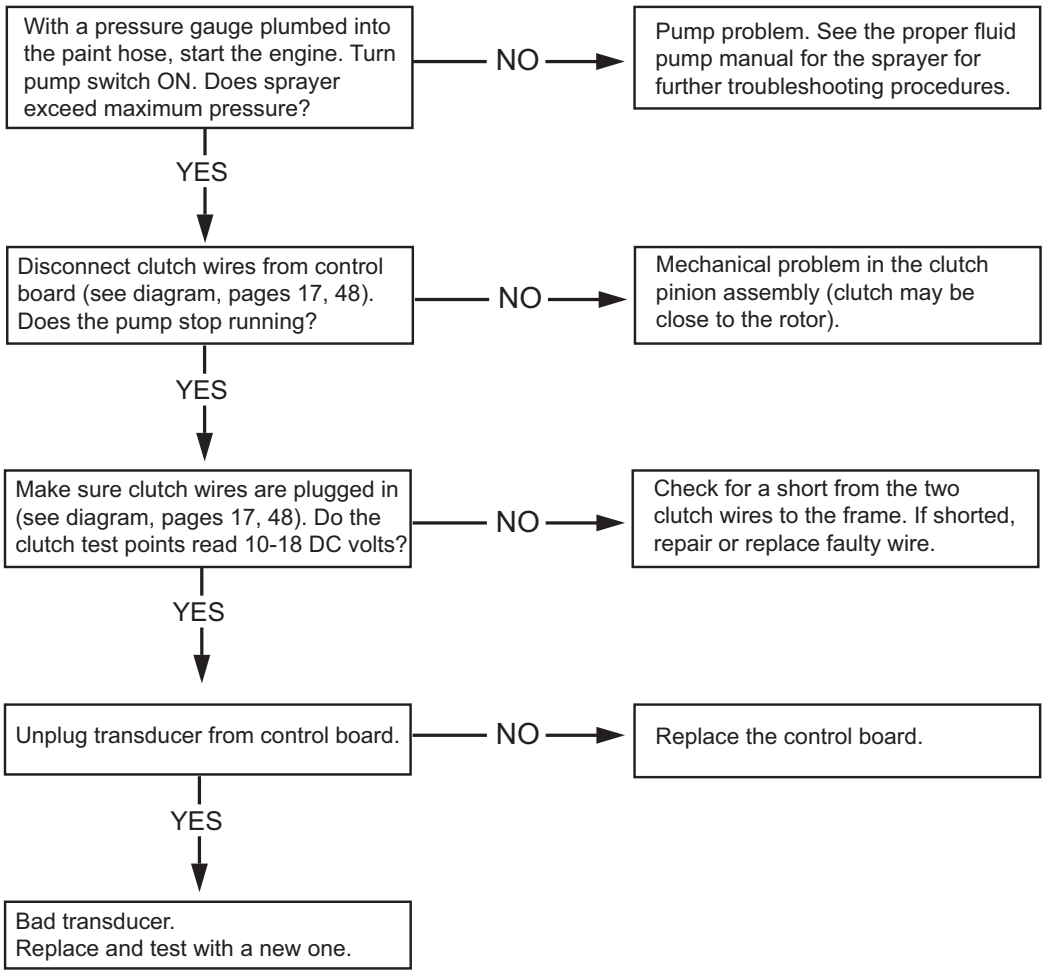

ti29061a

Control Board Malfunction

Troubleshooting Procedure (see following page for actual steps):

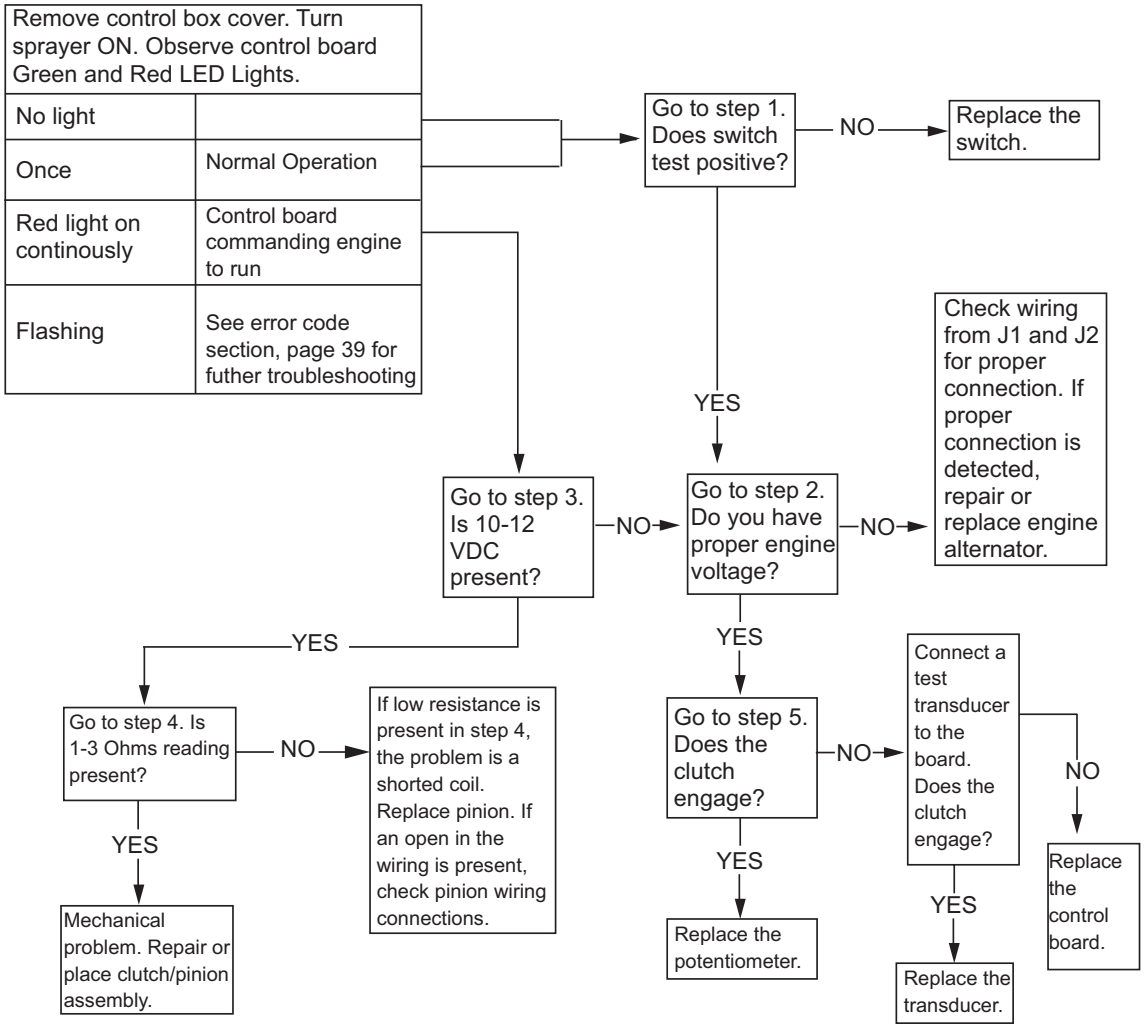

Control Board Malfunction (Steps)

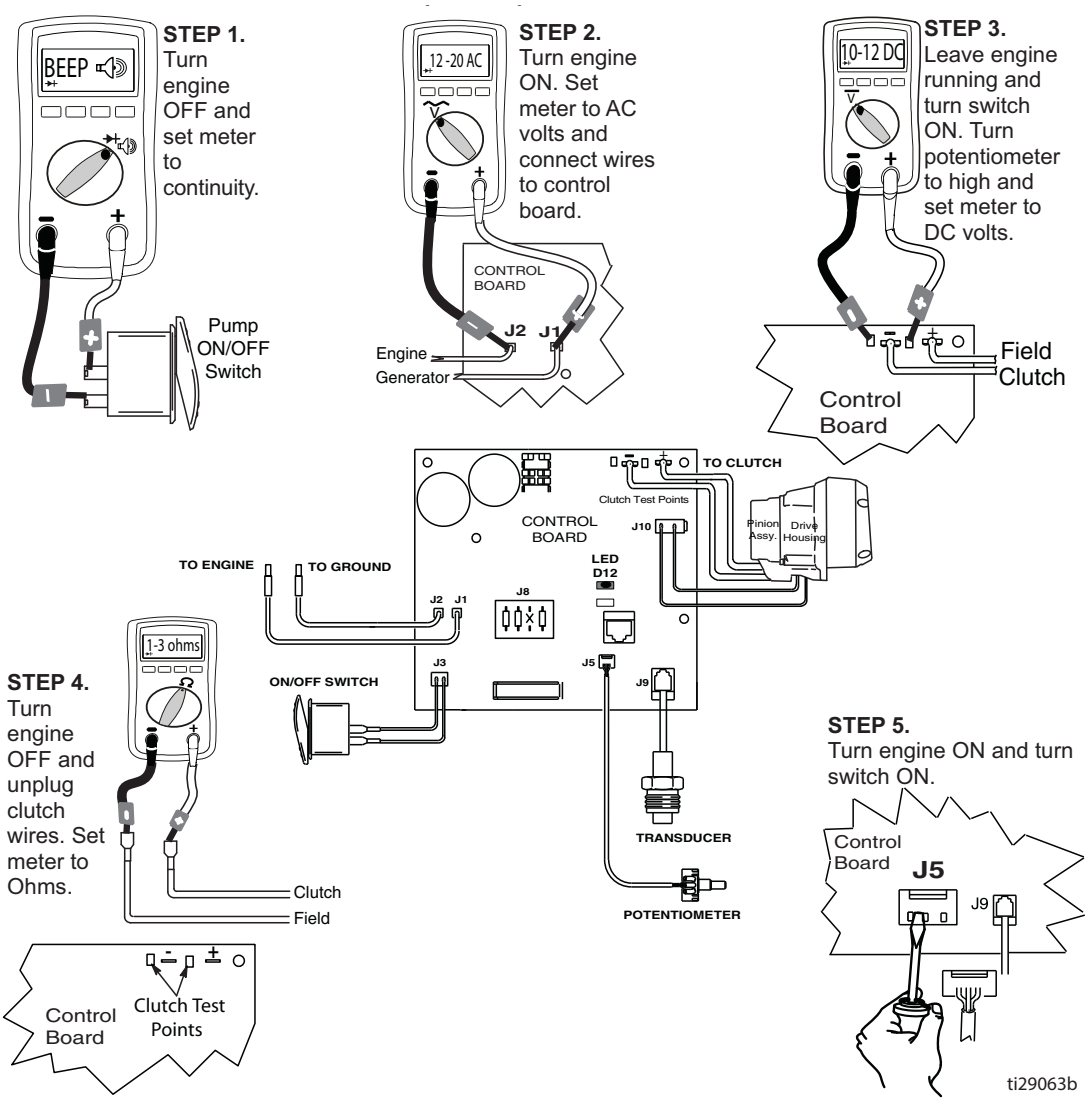

Pump Control Status LED

LED Status	SPRAYER OPERATION	INDICATION	ACTION
Red LED 1 blink at power up	Power is applied. (Pressure varies with tip size and pressure control setting).	Normal operation.	Spray
Red LED ON continuous	Sprayer won't run.	Pump won't cycle.	Ensure there is no resistor at J8/2 near the center of the pump control board.
Red LED 2 blinks continuous	Sprayer stops. Engine is running.	Exceeded pressure limit.	1. Check fluid path for clogs, such as clogged filter. 2. Open prime valve and gun if running AutoClean. 3. Use Graco paint hose, 1/4 in. x 50 ft minimum. Smaller hose or metal braid hose may result in pressure spikes. 4. Replace transducer if fluid path is not clogged and proper hose is used.
Red LED 3 blinks continuous	Sprayer stops. Engine is running.	Pressure transducer faulty, bad connection or broken wire.	1. Check transducer connection. 2. Disconnect and reconnect transducer plug to ensure good connection with control board socket. 3. Open prime valve. Replace sprayer transducer with known good transducer and run sprayer. Replace transducer if sprayer runs or control board if sprayer does not run.
Green LED ON continuous	Sprayer stops. Engine is running.	Loss of paint to pump or severe pressure loss.	1. Check for empty paint condition, clogged inlet strainer, failed pump or severe leak. 2. Reduce pressure and turn pump switch OFF and ON to restart pump.

Parts Drawing

25M232

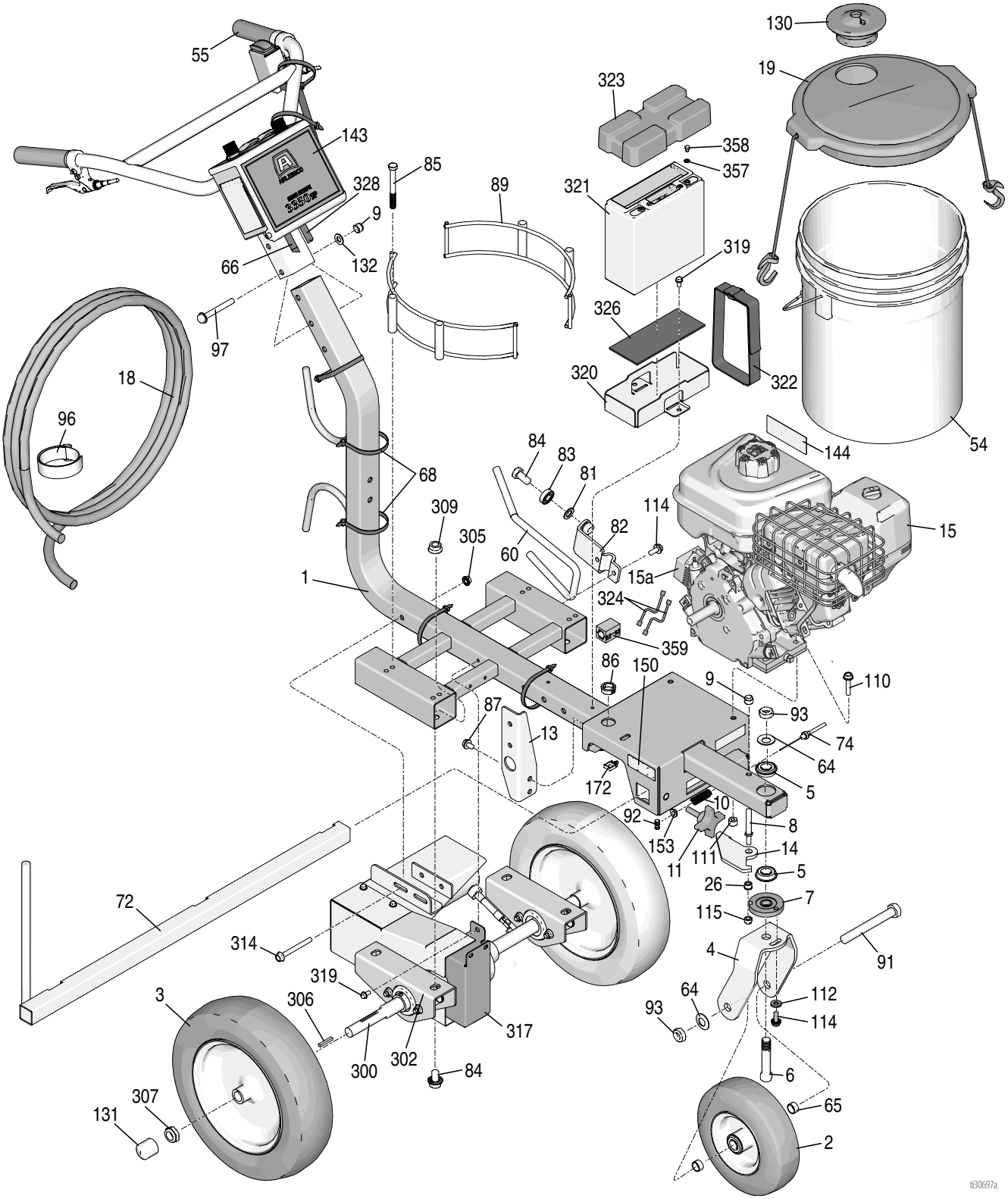

Parts List - 25M232

Ref.	Part	Description	Qty
1	17N511	FRAME	1
2	119542	WHEEL, small	1
3	17N070	WHEEL, large	2
4	17N149	FORK, painted	1
5	119532	BEARING, flanged	2
6	15E780	PIN, fork	1
7	15E773	DISK, adjuster	1
8	15E792	PIN, lever	1
9	101566	NUT, lock	3
10	114682	SPRING, compression	1
11	108471	KNOB, pronged	1
13	15E748	BRACKET, manifold	1
14	287682	LEVER, caster, includes 26	1
15	25P374	ENGINE, gasoline, 6.5 hp	1
15a	129777	REGULATOR	1
16	867670	FLUID, TSO, 6 oz. (not shown)	1
18	17M383	HOSE, coupled, 1/4 in. x 50 ft, nickel	1
19	24U241	KIT, pail cover	1
26	111016	BEARING, flange	1
32	128978	SCREW, 8-32 hex washer head	6
54	115077	PAIL, plastic	1
55	129378	GRIP, handle	2
60	15E993	ROD, brake	1
64	119563	WASHER, belleville	2
65	15E996	SPACER, wheel	2
66	15E995	HARNESS, wiring, control	1
68	404984	STRAP, tie	11
72	224052	BRACKET, support, gun	1
74	241445	CABLE, caster	1
81	195134	SPACER, ball, guide	1
82	198891	BRACKET, mounting	1
83	198931	BEARING	1
84	113961	SCREW, cap, hex hd	1
85	867517	SCREW, hex head, 3/8-16 x 3.5”	4
86	129528	GROMMET, split, 1” hole	1
87	111801	SCREW, cap, hex, hd	4
89	17N536	HOLDER, bucket	2
91	113665	SCREW, cap, hex hd	1
92	114802	WIRE, stop	1
93	119554	NUT, lock, nylon, thin pattern	2
96	129382	STRAP, hose wrap	1
97	116935	SCREW, cap, flng hd	2
110	110837	SCREW, flange, hex	2
111	110838	NUT, lock	2
112	122669	WASHER, flat, extra thick	1
114	110963	SCREW, cap, flng hd	3
115	111040	NUT, lock, insert, nylock, 5/16 in.	1
130	278723	GASKET, pail	1
131	17P224	CAP, leg	2
132	100731	WASHER	2
143	17N715	LABEL, SS 3350SP	1
144▲	194126	LABEL, warning	1
150▲	16P136	LABEL, safety, warning	1
153	111025	GASKET, polypropylene	1
172	117727	CLIP, wire	1
306	117632	KEY, square, 3/16	2
307	112405	NUT, lock	2
319	107257	SCREW, thd forming	10
320	17N480	HOLDER, battery	1
321	17P448	BATTERY, 22Ah	1
322	126949	STRAP, battery	1
323	17N699	COVER, battery	1
324	129421	ADAPTER, jumper	2
326	129529	PAD, battery	1
328	17N239	HARNESS, wire, drive power	1
357	111307	WASHER, lock, external	2
358	128131	SCREW, cap, hex, M5 x 6 mm	2
359	129544	SUPPRESSOR, ferrite	1
382	865714	SOLVENT, pump conditioner, 1 qt. (not shown)	1
▲	222385	LABEL, warning, medical alert (not shown)	1
▲	17K395	LABEL, safety, fire & explosion (not shown)	1
▲	17K396	LABEL, safety, battery (included with 321)	1
▲	17K854	LABEL, safety, fire & explosion (not shown)	1
▲	17K855	LABEL, safety, fire & explosion (not shown)	1
▲	17K856	LABEL, safety, injection (not shown)	1
▲	17K857	LABEL, safety, fire & explosion (not shown)	1
▲	17A134	LABEL, safety, medical alert (not shown)	1
▲	16Y631	LABEL, safety, explosion (not shown)	1
▲	16Y633	LABEL, safety, explosion (not shown)	1
▲	17P263	LABEL, safety, injection, fire & explosion (not shown)	1
▲	17P265	LABEL, safety, injection, fire & explosion (not shown)	1

▲ *Replacement Danger and Warning labels, tags, and cards are available at no cost.*

Parts Drawing

Self-Propelled Drive - Series A

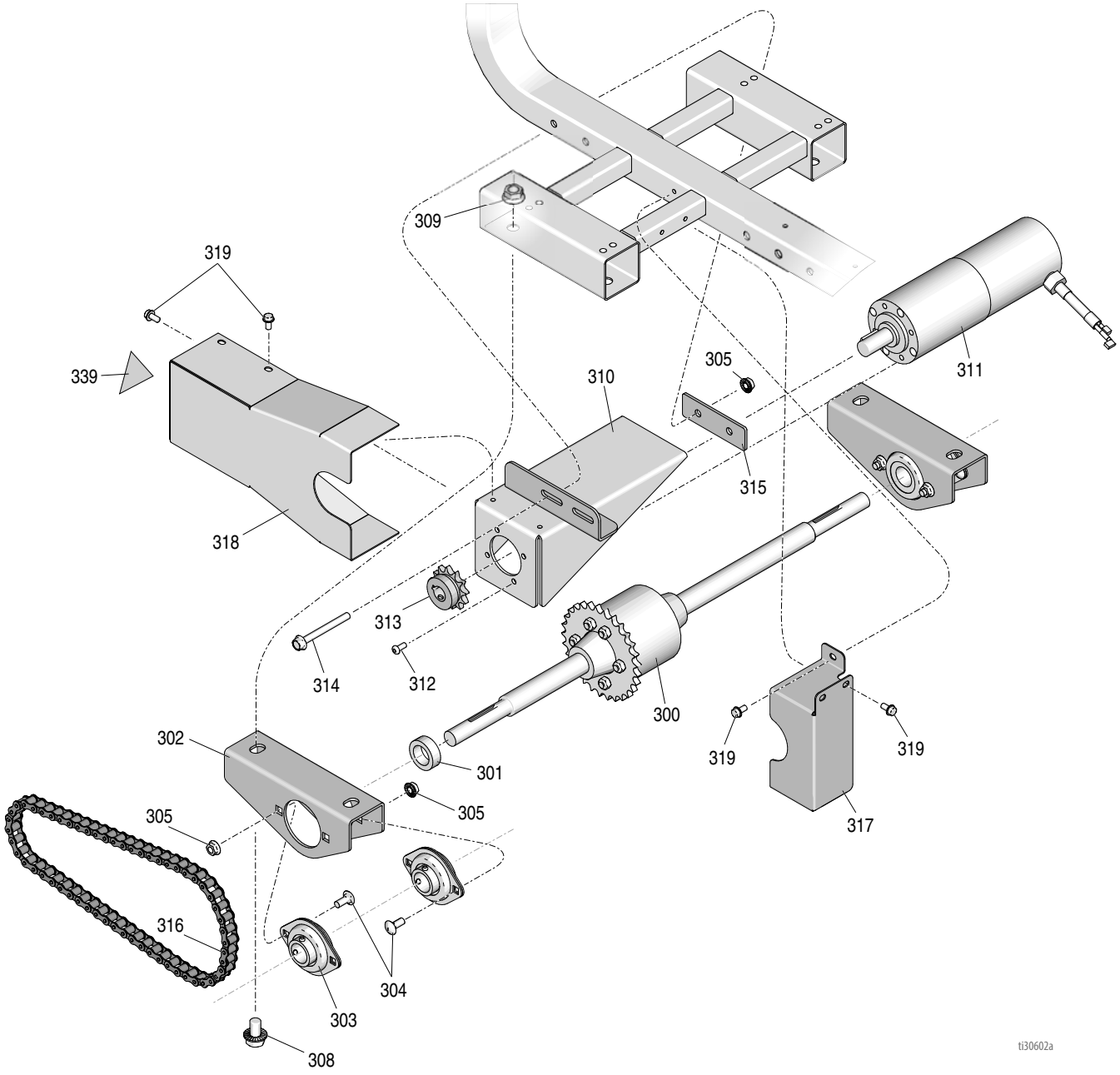

Parts List - Self-Propelled Drive - Series A

Ref.	Part	Description	Qty
300	17N475	AXLE, self-propelled	1
301	17N316	SPACER, unthreaded	1
302	17N662	BRACKET, axle	2
303	129437	BEARING, flange, 2 bolt	4
304	129465	BOLT, carriage	8
305	110996	NUT, hex, flange	10
308	111802	SCREW, cap, hex hd	4
309	112731	NUT, hex, flanged	4
310	17P354	BRACKET, motor	1
311†•	17N311	MOTOR, 12V DC gear	1
312	121518	SCREW, cap, shc	4
313	129467	SPROCKET, 12 tooth	1
314	120229	SCREW, hex, flange	2
315	17P355	BRACE, motor bracket, painted	1
316	129466	CHAIN, roller, #40	1
317	17P356	BRACKET, chain guard	1
318	17P357	GUARD, chain, painted	1
339▲	16M768	LABEL, safety, warning, entangle	1

† *Uses Brush Replacement Kit 17P445*

• *Series B Motor Upgrade Kit 26C483 available for drive/motor replacement.*

▲ *Replacement Danger and Warning labels, tags, and cards are available at no cost.*

Parts Drawing

Self-Propelled Drive - Series B

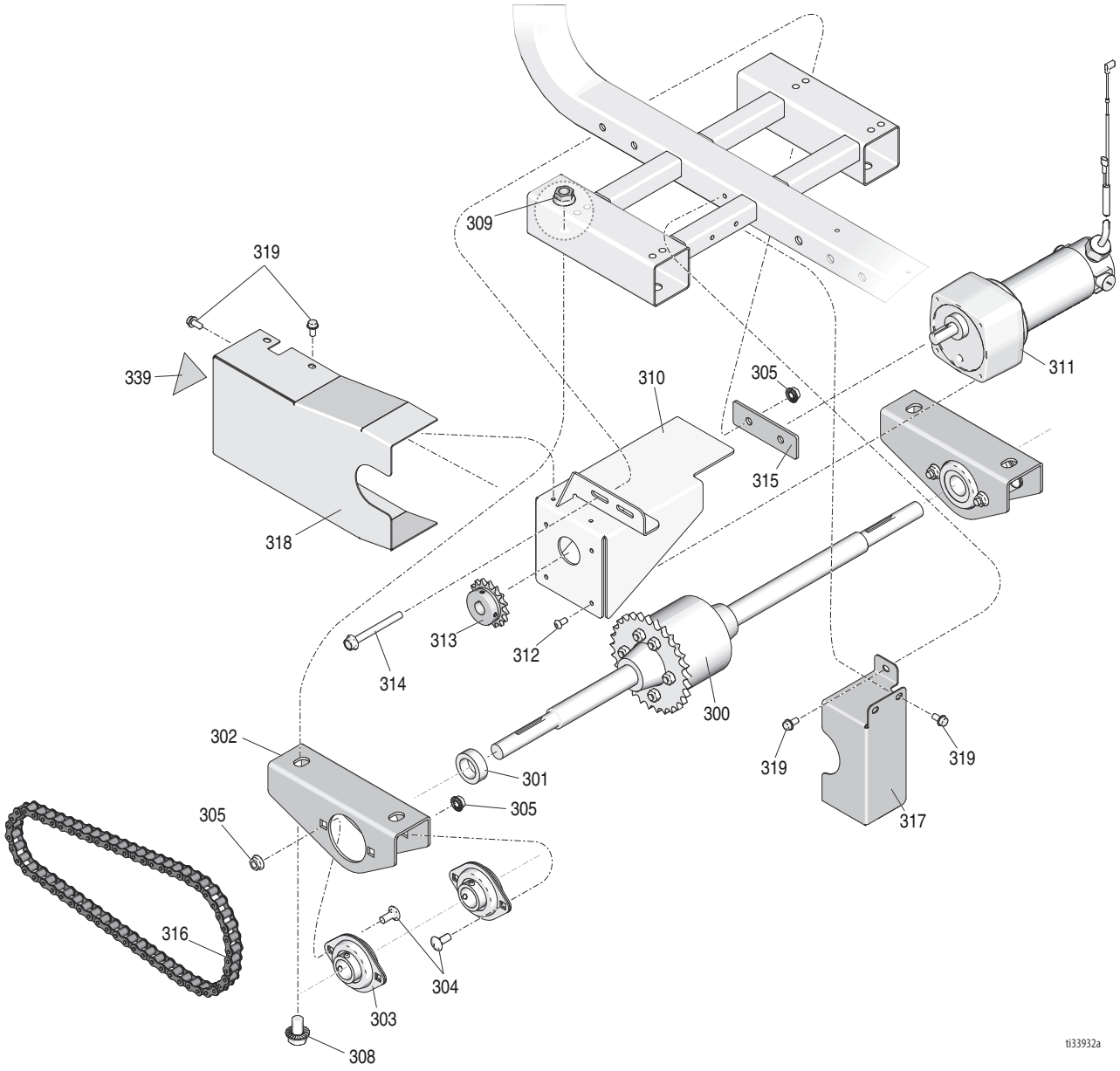

Parts List - Self-Propelled Drive - Series B

Ref.	Part	Description	Qty
300	17N475	AXLE, self-propelled	1
301	17N316	SPACER, unthreaded	1
302	17N662	BRACKET, axle	2
303	129437	BEARING, flange, 2 bolt	4
304	129465	BOLT, carriage	8
305	110996	NUT, hex, flange	10
308	111802	SCREW, cap, hex hd	4
309	112731	NUT, hex, flanged	4
310	26C312	BRACKET, motor, painted	1
311*	19A402	MOTOR, geared	1
312	111962	SCREW, 1/4-28 x .5”	4
313	19A403	SPROCKET, #40, 16T	1
314	120229	SCREW, hex, flange	2
315	17P355	BRACE, motor bracket, painted	1
316	129466	CHAIN, roller, #40	1
317	17P356	BRACKET, chain guard	1
318	26C314	GUARD, chain, painted	1
339▲	16M768	LABEL, safety, warning, entangle	1

** Uses Brush Replacement Kit 26C313*

▲ Replacement Danger and Warning labels, tags, and cards are available at no cost.

Parts Drawing

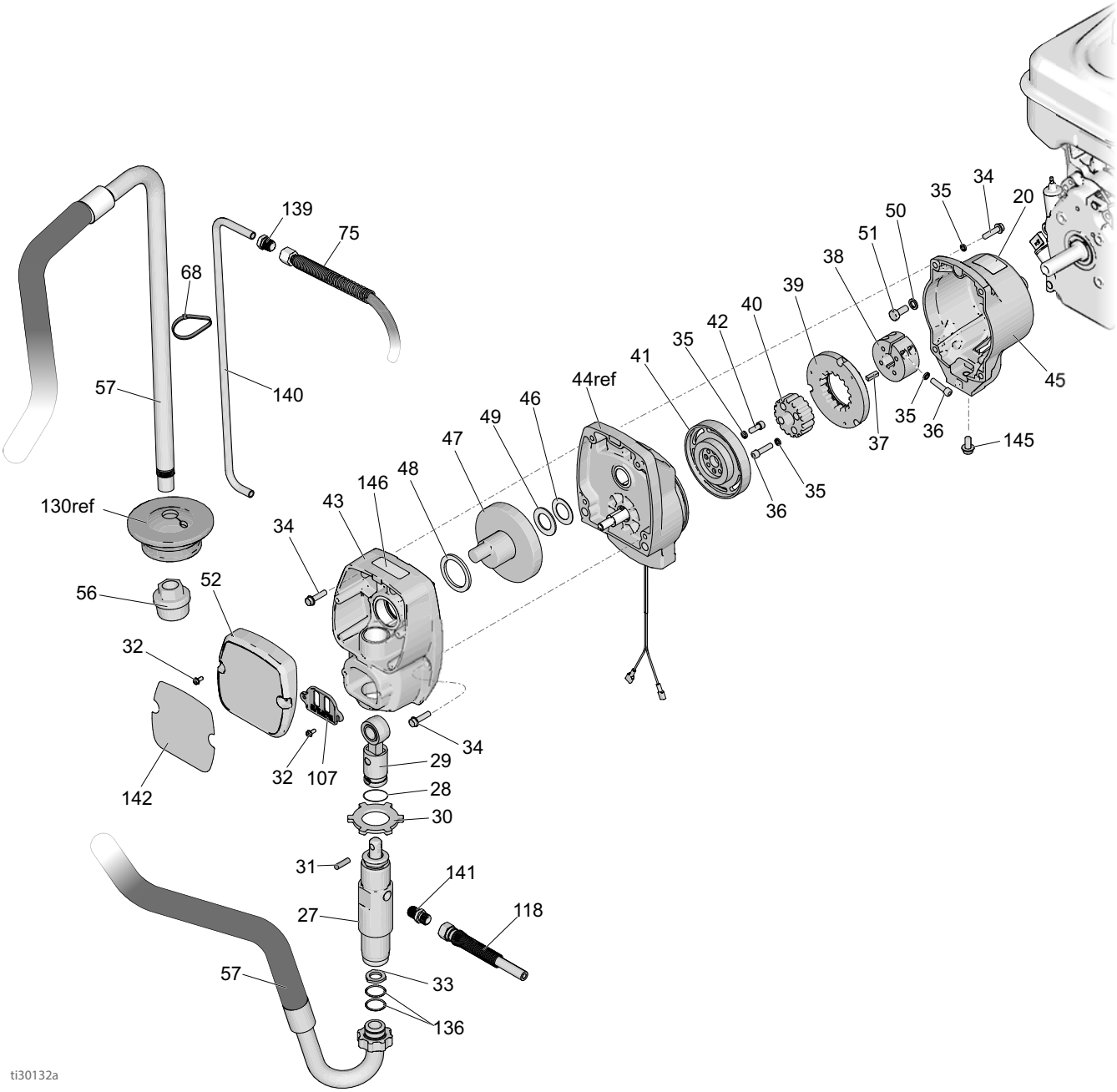

Parts List - 25M232

Ref.	Part	Description	Qty
20	16D576	LABEL, made in USA	1
27	17M989	PUMP, displacement	1
28	196750	SPRING, retaining	1
29	287053	ROD, connecting	1
30	195150	NUT, jam, pump	1
31	196762	PIN, straight	1
32	128978	SCREW, mach, hex washer head	6
33†	115099	WASHER	1
34	119426	SCREW, mach, hex washer hd	8
35*	105510	WASHER, lock, spring (hi-collar)	10
36*	108803	SCREW, hex, socket head	6
37	183401	KEY, parallel	1
38	193680	COLLAR, shaft	1
39*	193673	ARMATURE, clutch, 4 in.	1
40*		HUB, armature	1
41*		ROTOR, clutch, 4 in.	1
42*	101682	SCREW, cap, sch	4
43	17M310	HOUSING, drive, includes 32, 34	1
45	17M314	HOUSING, clutch, machine	1
46	116074	WASHER, thrust	1
47	287484	CRANK, includes 46, 48, 49	1
48	180131	BEARING, thrust	1
49	107434	BEARING, thrust	1
50	100214	WASHER, lock	4
51	108842	SCREW, cap, hex hd	4
52	277019	COVER, front, includes 32	1
56†	246385	STRAINER, 7/8-14 unf	1
57	17P807	HOSE, suction, includes 33, 56, 130, 136	1
75†	17M382	HOSE, cpld, 1/4 in. X 3 ft	1
107	15B589	COVER, pump rod	1
118	17M384	HOSE, coupled, 1/4 in. X 22.25 in.	1
136†	117559	O-RING	2
139†	196180	BUSHING	1
140†	16X071	TUBE, drain	1
141	196181	FITTING, nipple	2
142	17N714	LABEL, pump, SS 3350SP	1
145	112395	SCREW, cap, flng hd	1
146▲	290228	LABEL, warning	1

▲ *Replacement Danger and Warning labels, tags, and cards are available at no cost.*
* *Included in Clutch Replacement Kit 241109*
† *Included in Suction Hose Kit 17P807*

Parts Drawing and List - Pinion Housing

Ref No. 44: Pinion Housing

Ref.	Part	Description	Qty
44	17R785	HOUSING, pinion, kit	1
44a	17R793	KIT, repair, coil	1
44b	105489	PIN	2
44c*	17R788	PINION SHAFT	1
44d*	113094	RETAINING RING, large	1
44e*	165295	O-RING, packing	1

* May be ordered separately

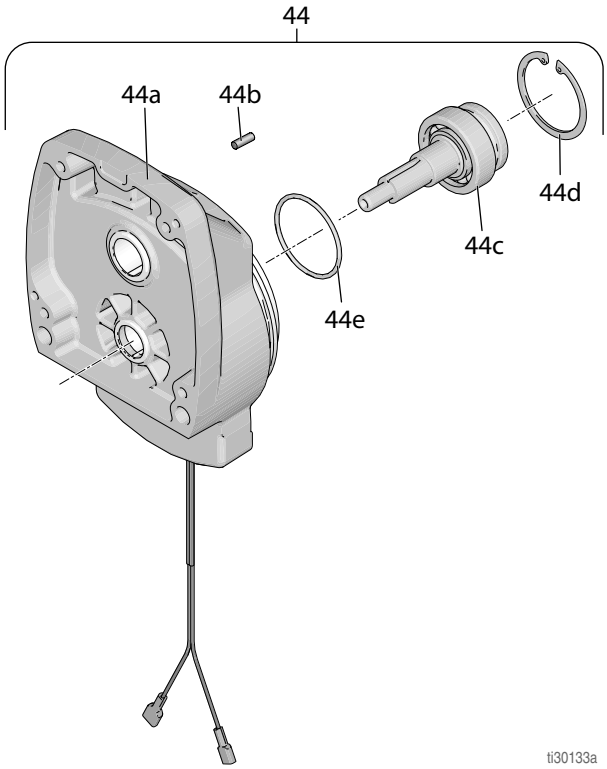

Gun Arm Parts

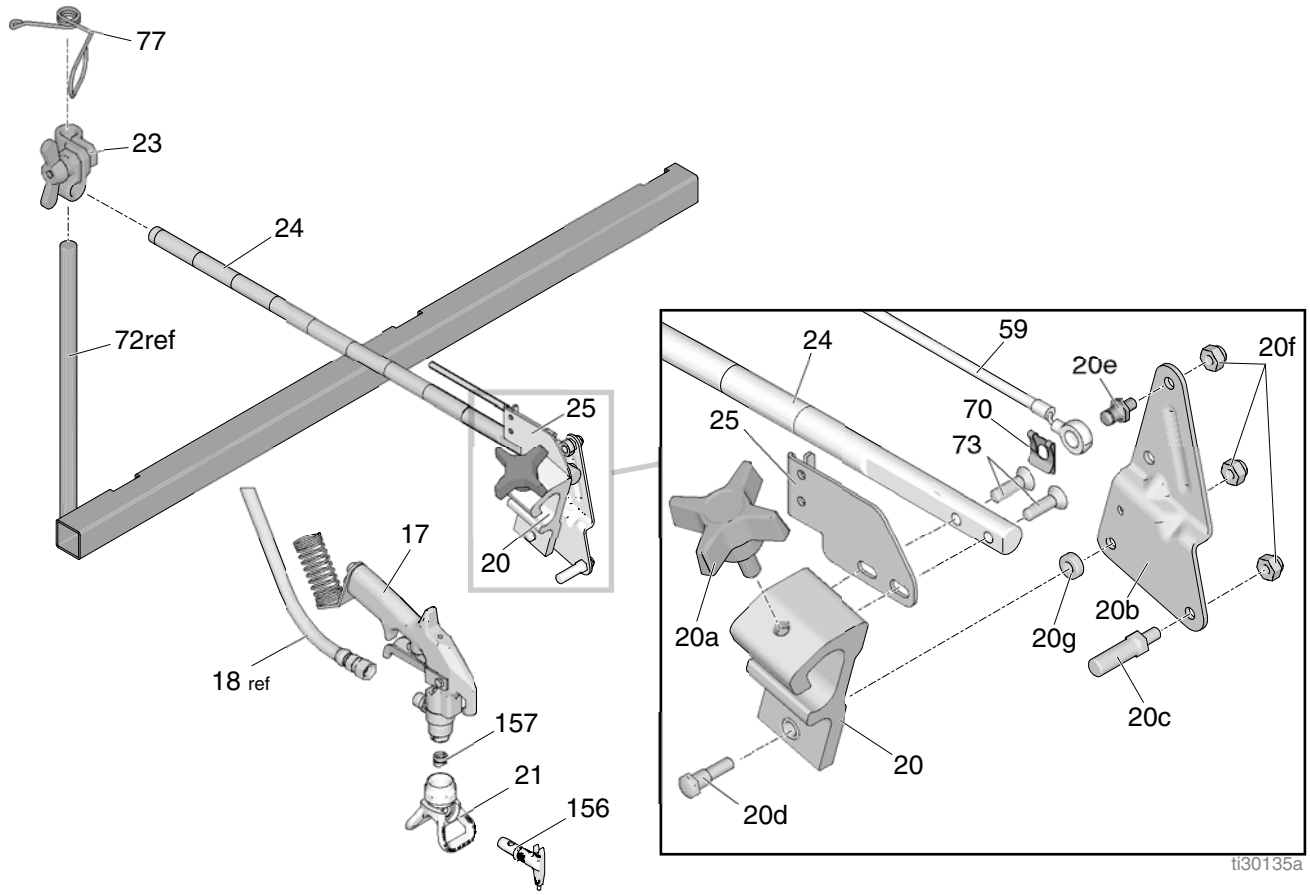

Ref	Part	Description	Qty
17	25M223	GUN, SureStripe	1
20*	15F216	HOLDER, gun	1
20a*	15F750	HOLDER, gun, knob	1
20b*	15F214	LEVER, actuator	1
20c*	15F209	STUD, pull trigger	1
20d*	24Y991	KIT, pivot	1
20e*	17H673	STUD, cable	1
20f*	102040	NUT, lock	3
20g*	24Y991	KIT, pivot	1
21	248200	GUARD, Uni-Tip	1
23	287566	KIT, clamp	1
24*	17J145	ARM, holder, gun	1
25*	15F213	BRACKET, cable	1

Ref	Part	Description	Qty
59	15E992	CABLE, gun	1
70*	126111	RETAINER, CirClip, external, 8mm	1
73*	113428	SCREW, cap, socket, flthd	2
77	188135	GUIDE, cable	1
156	69319ST	TIP, spray, striping	1
	69317ST	TIP, spray, striping	1
	*17H720	STRAP, tie	3
157†	195558	SEAT, cylinder	1
	115524	GASKET	1

** Included in Gun Holder Repair Kit 25A528*
† Included with 156

Pressure Control/Filter Assembly

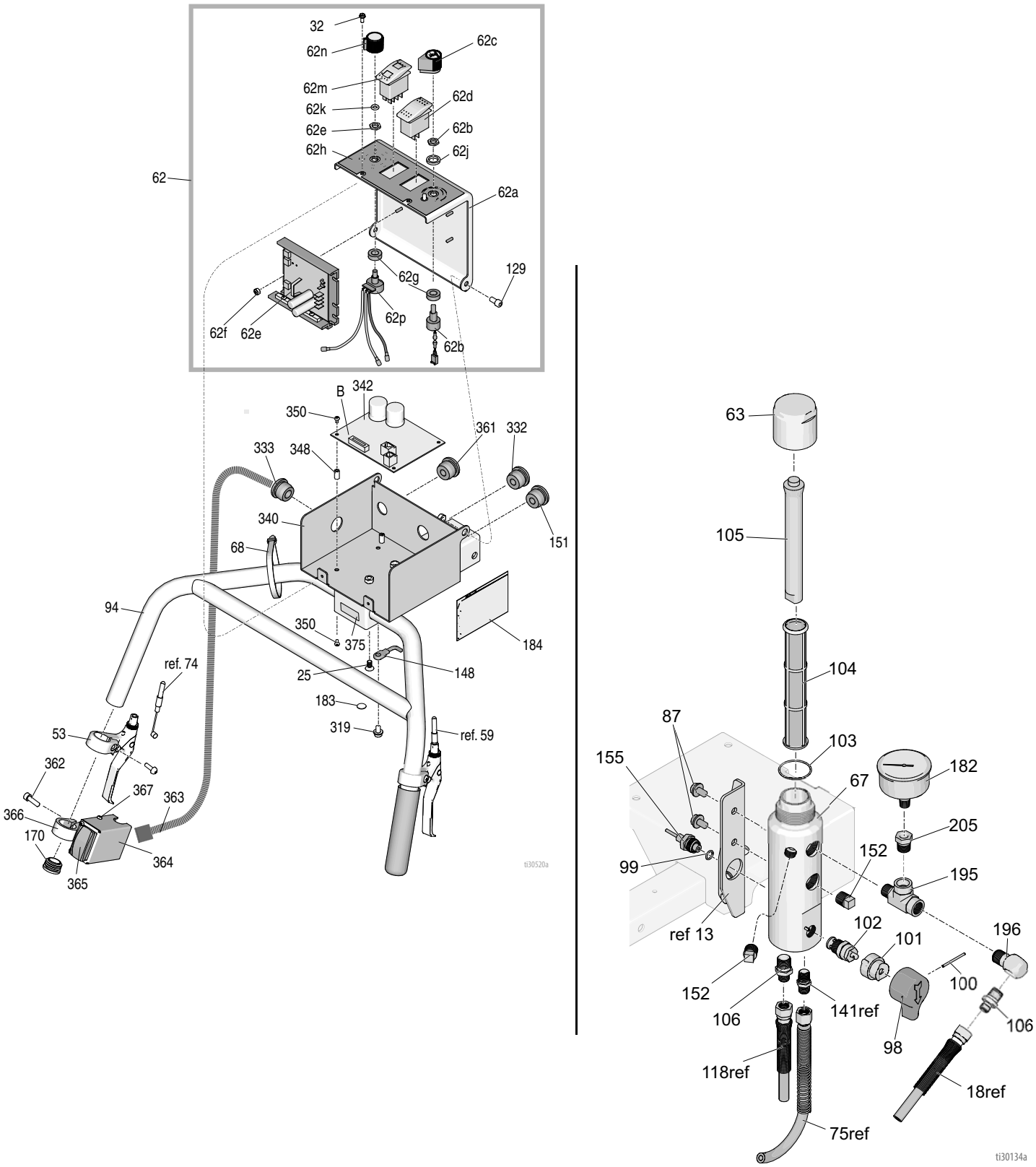

Parts List - Pressure Control/Filter Assembly

Ref	Part	Description	Qty
25	108538	SCREW, cap, flat hd	1
53	194310	LEVER, actuator	2
62	24Z793	COVER, control box, assy	1
62a	17N544	COVER, control box	1
62b	129631	POTENTIOMETER	1
62c	116167	KNOB, potentiometer	1
62d	116752	SWITCH, rocker	1
62e	17R784	BOARD, control, motor, includes 62p	1
62f	C19862	NUT, lock hex	4
62g	198650	SPACER, shaft	2
62h	17N702	LABEL, controls	1
62j	15C973	GASKET	1
62k	129509	O-RING, 70 durometer	1
62m	17N906	SWITCH, rocker, LED	1
62n	17N957	KNOB, potentiometer	1
62p	17R749	POTENTIOMETER, speed	1
63*	15C765	CAP, manifold, includes 103, 105	1
67*	17K166	MANIFOLD, filter	1
87	111801	SCREW, cap, hex hd	4
94	24Z284	BAR, handle, weldment	1
98*	15C780	HANDLE	1
99*	111457	O-RING	1
100*	15C972	PIN, grooved	1
101*	224807	BASE, valve	1
102*	239914	VALVE, drain	1
103*	117285	O-RING	1
104*	243984	FILTER, fluid	1
105*	15C766	TUBE, diffusion	1
106*	196177	ADAPTER, nipple	2
129	101550	SCREW, cap, sch	2
148	237686	WIRE, ground, assembly w/ clamp	1
151	15F928	BUSHING, strain relief	1
152*	15G331	PIPE, plug, sst	2
155*	15F782	HARNESS, transducer, line striper	1
170	120151	PLUG, tube	2
182*	804582	GAUGE, pressure fluid	1
183	16W503	LABEL, ground symbol	1
184	17P264	LABEL, safety	1
195*	124490	FITTING, tee	1
196*	196179	FITTING, elbow	1
205*	129535	BUSHING, pipe	1
332	129433	BUSHING, strain relief	1
333	129434	BUSHING, strain relief	1
340	17N545	BASE, box, control	1
342	24Z718	BOARD, control, pump	1
348	129510	STANDOFF, thd, hex	4
350	103854	SCREW, mach, BDGH	8
361	111348	BUSHING, strain relief	1
362	513035	SCREW, cap, M6 x 20mm	1
363	17N299	HARNESS, wiring	1
364	17P942	COVER, switch, housing	1
365	17N907	SWITCH, D-N-Cruise	1
366	17N514	BASE, mount, switch	1
367	103854	SCREW, #6 x .25	4
375	17R193	LABEL, prime, charge	1

** Included in Filter Repair Kit 17P809*

Pressure Control Wiring Diagram

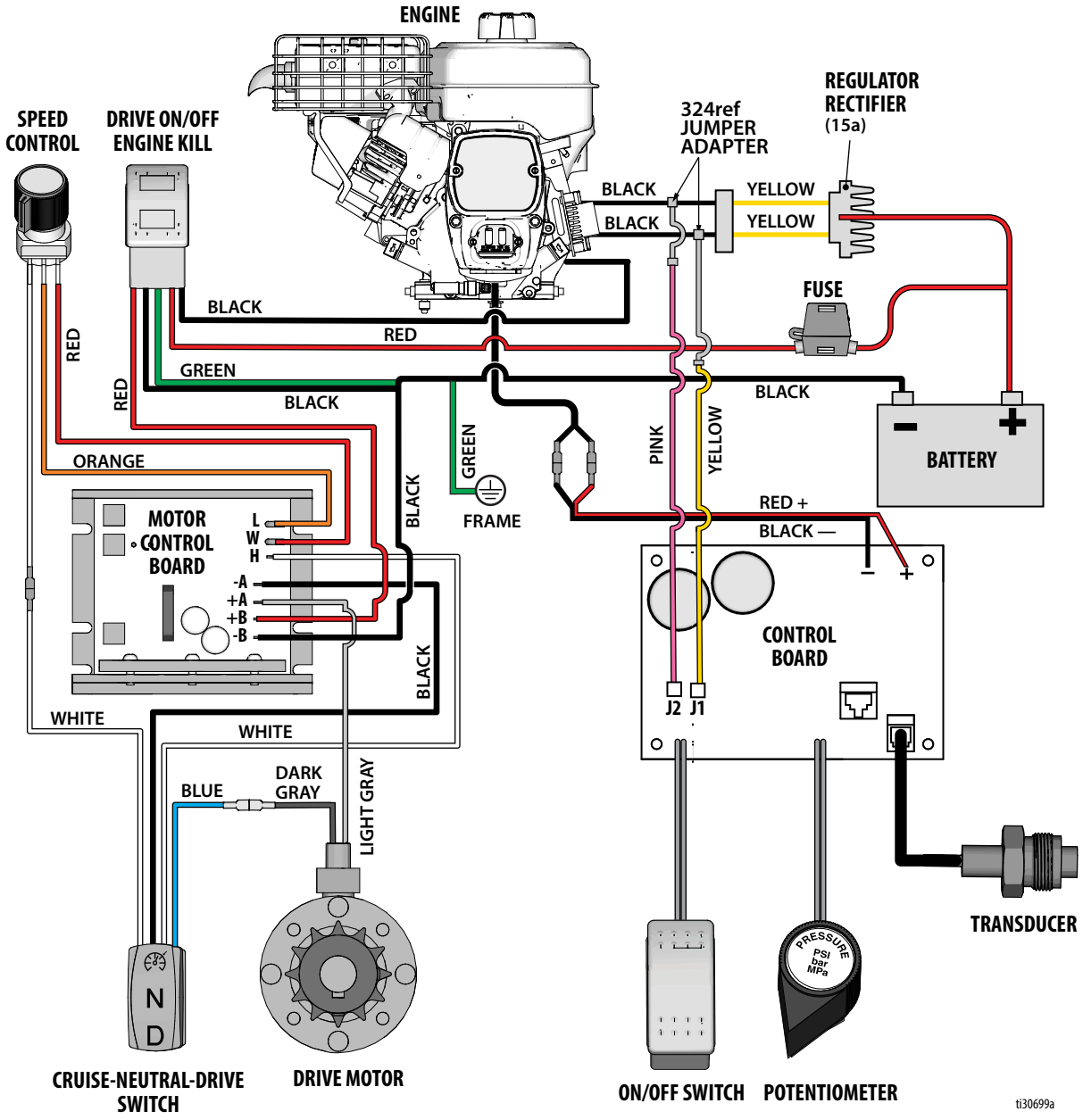

Drive Control Wiring Diagram

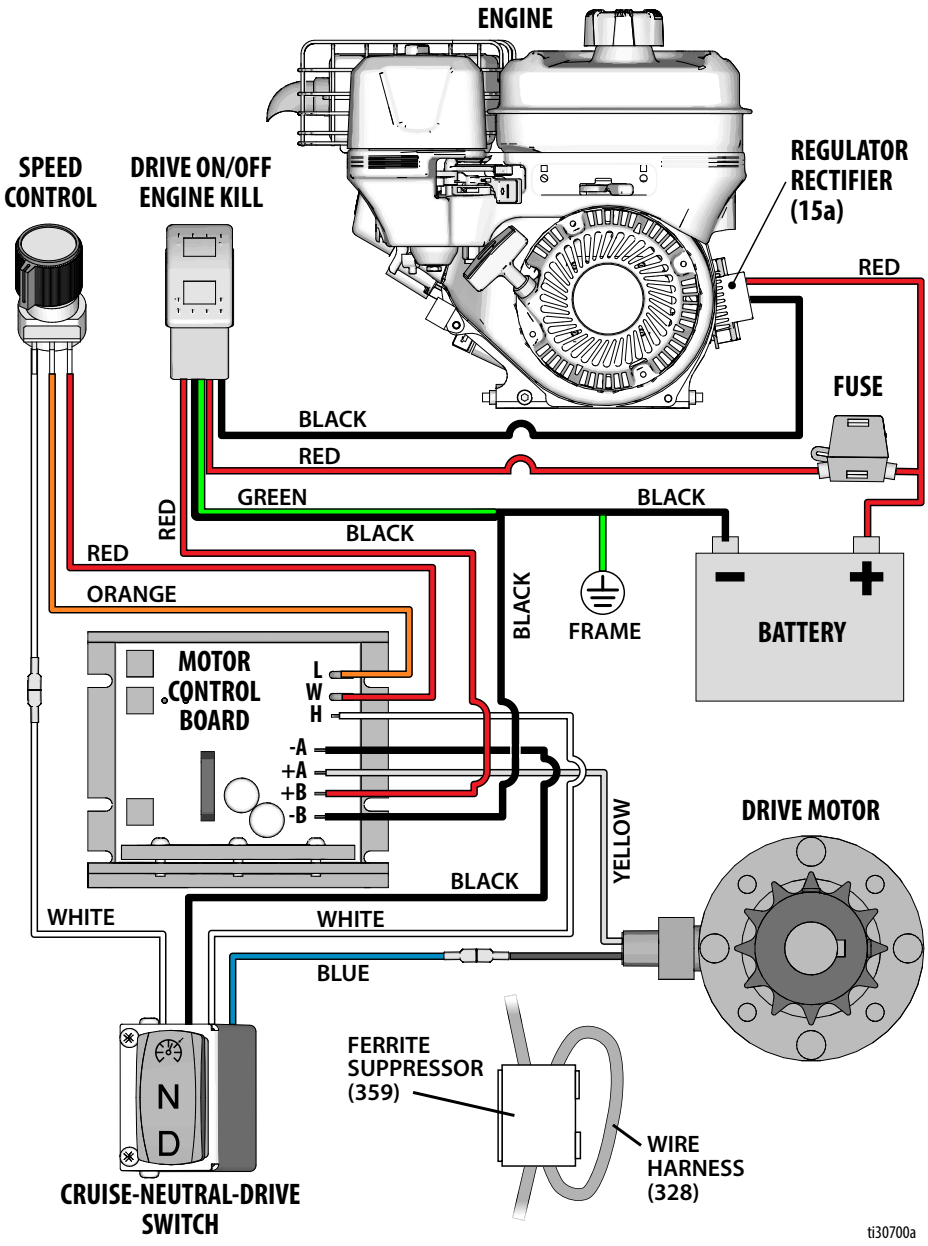

Technical Data

Sure Stripe 3350SP (Model 25M232)		
	US	**Metric**
Briggs & Stratton Vanguard™ Model 130000		
SAE J1995 @ 3600 rpm	5.5 Horsepower	
Maximum working pressure	3300 psi	22.8 MPa, 228 bar
Maximum delivery	0.75 gpm	2.84 lpm
Maximum tip size	1 gun with 0.027 in. tip	
Inlet paint strainer	12 mesh (893 micron) stainless steel screen, reusable	
Outlet paint strainer	60 mesh (250 micron) stainless steel screen, reusable	
Pump inlet size	1.0 in. diameter	
Fluid outlet size	0.25 in. diameter	
Vibration, per ISO 5349		
Right Hand	163 in/s^2	4.14 m/s^2
Left Hand	234 in/s^2	5.94 m/s^2
Sound power, per ISO 3741	95.5 dBa	
Wetted parts	stainless steel, PTFE, leather, nylon, zinc-plated and nickel-plated carbon steel, tungsten carbide, chrome plating, UHMWPE, acetal, polyethylene	
Dimensions (25M230)		
Weight (dry, without packaging)	218 lb.	98.9 kg
Height Handles Down	39.4 in.	100.0 cm
Height Handles Up	41.3 in.	104.8 cm
Length Handles Down	63.3 in.	160.7 cm
Length Handles Up	65.0 in.	165.1 cm
Width	35.8 in.	90.8 cm
Gun		
Maximum Working Pressure	5000 psi	345, 3.45 (bar, MPa)
Weight (with tip and guard)	18 oz.	510 g
Inlet	1/4 npsm male	
Maximum material temperature	120°F	50°C

Notes

Airlessco Standard Warranty

Airlessco warrants all equipment referenced in this document which is manufactured by Airlessco and bearing its name to be free from defects in material and workmanship on the date of sale to the original purchaser for use. With the exception of any special, extended, or limited warranty published by Airlessco, Airlessco will, for a period of twelve months from the date of sale, repair or replace any part of the equipment determined by Airlessco to be defective. This warranty applies only when the equipment is installed, operated and maintained in accordance with Airlessco's written recommendations.

This warranty does not cover, and Airlessco shall not be liable for general wear and tear, or any malfunction, damage or wear caused by faulty installation, misapplication, abrasion, corrosion, inadequate or improper maintenance, negligence, accident, tampering, or substitution of non-Airlessco component parts. Nor shall Airlessco be liable for malfunction, damage or wear caused by the incompatibility of Airlessco equipment with structures, accessories, equipment or materials not supplied by Airlessco, or the improper design, manufacture, installation, operation or maintenance of structures, accessories, equipment or materials not supplied by Airlessco.

This warranty is conditioned upon the prepaid return of the equipment claimed to be defective to an authorized Airlessco distributor for verification of the claimed defect. If the claimed defect is verified, Airlessco will repair or replace free of charge any defective parts. The equipment will be returned to the original purchaser transportation prepaid. If inspection of the equipment does not disclose any defect in material or workmanship, repairs will be made at a reasonable charge, which charges may include the costs of parts, labor, and transportation.

THIS WARRANTY IS EXCLUSIVE, AND IS IN LIEU OF ANY OTHER WARRANTIES, EXPRESS OR IMPLIED, INCLUDING BUT NOT LIMITED TO WARRANTY OF MERCHANTABILITY OR WARRANTY OF FITNESS FOR A PARTICULAR PURPOSE.

Airlessco's sole obligation and buyer's sole remedy for any breach of warranty shall be as set forth above. The buyer agrees that no other remedy (including, but not limited to, incidental or consequential damages for lost profits, lost sales, injury to person or property, or any other incidental or consequential loss) shall be available. Any action for breach of warranty must be brought within two (2) years of the date of sale.

AIRLESSCO MAKES NO WARRANTY, AND DISCLAIMS ALL IMPLIED WARRANTIES OF MERCHANTABILITY AND FITNESS FOR A PARTICULAR PURPOSE, IN CONNECTION WITH ACCESSORIES, EQUIPMENT, MATERIALS OR COMPONENTS SOLD BUT NOT MANUFACTURED BY Airlessco. These items sold, but not manufactured by Airlessco (such as electric motors, switches, hose, etc.), are subject to the warranty, if any, of their manufacturer. Airlessco will provide purchaser with reasonable assistance in making any claim for breach of these warranties.

In no event will Airlessco be liable for indirect, incidental, special or consequential damages resulting from Airlessco supplying equipment hereunder, or the furnishing, performance, or use of any products or other goods sold hereto, whether due to a breach of contract, breach of warranty, the negligence of Airlessco, or otherwise.

FOR AIRLESSCO CANADA CUSTOMERS
The Parties acknowledge that they have required that the present document, as well as all documents, notices and legal proceedings entered into, given or instituted pursuant hereto or relating directly or indirectly hereto, be drawn up in English. Les parties reconnaissent avoir convenu que la rédaction du présente document sera en Anglais, ainsi que tous documents, avis et procédures judiciaires exécutés, donnés ou intentés, à la suite de ou en rapport, directement ou indirectement, avec les procédures concernées.

TO PLACE AN ORDER OR FOR SERVICE, contact your Airlessco distributor,
or call 1–800–223-8213 to identify the nearest distributor.

All written and visual data contained in this document reflects the latest product information available at the time of publication. Airlessco reserves the right to make changes at any time without notice.

For patent information, see www.graco.com/patents

Original Instructions. This manual contains English. MM 3A4637

GRACO INC. AND SUBSIDIARIES • P.O. BOX 1441 • MINNEAPOLIS MN 55440-1441 • USA

Copyright 2010, Graco Inc. All Graco manufacturing locations are registered to ISO 9001.

Revision F, March 2020