Co-generation technology: the key to a more fuel-efficient proportioning system

WHITE PAPER

Abstract

Used to apply polyurethane foam or polyurea, the Graco® integrated series of Reactor™ proportioning systems (Figures 1 and 2) combines a proportioner with a diesel generator. It is the first heat-as-you-go polyurethane application equipment that uses co-generation technology to improve spraying performance and save diesel fuel.

The idea for the new integrated system grew out of recognizing the need for smaller, more fuel-efficient proportioning systems. It was clearly desirable to lower the entry and operating costs for the portable spray rig owner, yet still provide the same level and quality of system output.
In using co-generation technology, the focus of the Graco design team became three-fold: develop a complete, portable, fuel-efficient system; design a better user interface and system controls; and improve or maintain the same level of spray performance.

Co-generation is a method to generate both heat and electricity from a single power source. This new integrated system uses a dual coolant loop to capture waste heat from the generator coolant system. The heated coolant is metered to heat exchangers that warm the material on an as-needed basis. The system results in a 25% improvement in temperature rise, compared to a standard Reactor unit. The heating system is regulated by proprietary software, ensuring rapid temperature rise and accurate control. Since electric heaters can be eliminated for most foam applications and significantly reduced in size for polyureas, the integrated system uses a smaller, more fuel-efficient generator. Calculations show, and field testing confirms, significant fuel savings—up to 50% per year in some cases. The new series of proportioners is a completely engineered solution with reduced electrical consumption, improved heating capacity, and advanced controls – representing innovation in operation, productivity and efficiency.

Figure 1 – The integrated Reactor system shown with an optional air compressor

Figure 2 – Shown from back side, the palletized system includes an integrated generator

AUTHOR:

Arthur T. Graf
AFTD Electrical Design Engineer
Graco Inc.

Design Considerations

A standard Graco Reactor proportioner operates with standard independent devices, such as an air compressor, generator, breathing air system, supply pumps, and other auxiliary equipment. Because joining the generator with the Reactor would significantly change the way a complete proportioning system would be built and operated, considerable effort went into developing a system that would blend well with customer and distributor expectations. The Graco engineering team determined three key design requirements for operating a complete proportioning system: electrical power and air requirements, system form factor, and usability considerations.

Electrical Power and Air Requirements

Electrical power and air requirements form the foundation for how the Reactor proportioner operates. In considering design goals, the team determined where to affect the greatest increases in system power efficiency.

Electrical loads in a portable proportioning system (see Figure 3) include:

1. Reactor electric motor and fluid heaters
2. Air compressor
3. Air dryer
4. Breathing air
5. Lights
6. Band or blanket heaters
7. Heating or air conditioning

These loads can be broken down into base-system (1 through 4) and auxiliary loads (5 through 7). As for compressed air, the following pneumatic loads are required for system operation:

8. Supply pumps
9. Agitator(s)
10. Gun air
11. Breathing air

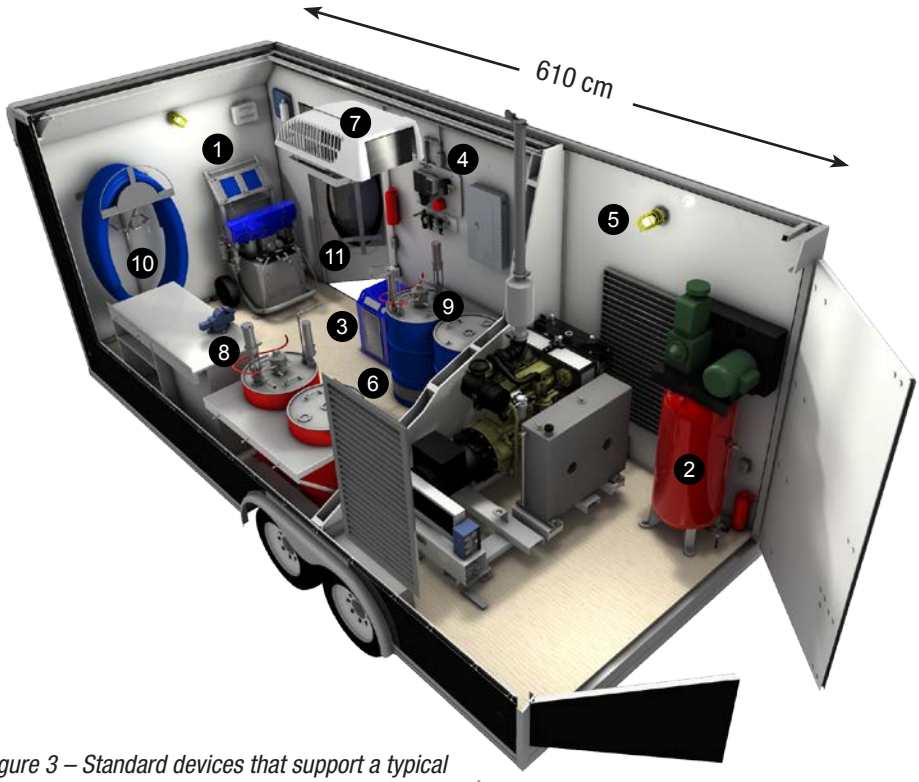

Figure 3 – Standard devices that support a typical portable proportioning system

Since compressed air power is derived from electrical power, the system optimization became two tiered: how could compressed air loads be reduced and how could electrical loads be reduced, yet keep the same functionality? The ability to reduce these loads would directly affect the choice of engine and generator size for the integrated Reactor system.

In researching and optimizing the compressed air loads, the team found that high-pressure breathing air systems require significant volumes of air, so they decided to only support a two-mask low-pressure breathing air system. Optimal agitator speeds for various materials were researched since the amount of air used is directly proportional to agitator speed.
The team devised a way to limit the volume of air supplied to the agitator to reduce the chance of overloading a smaller air compressor.

When it came to electrical loads, the primary goal of the project came into play: reduce or eliminate fluid heater electrical power requirements by capturing waste heat from the engine. Another goal was to limit peak in-rush currents drawn by the cycling of the air compressor by using a compressor with a continuous-run head unloader. Other power requirements were difficult to reduce, except through recommendations made to the contractor, such as using lower wattage blanket heaters instead of band heaters to condition their material.

System Form Factor

The second key design area that the engineering team focused on was system form factor.
The goal was to develop a system package that could be palletized and fit in a trailer, box truck, or cargo van (see Figure 4). Size and weight were critical to meet this goal.

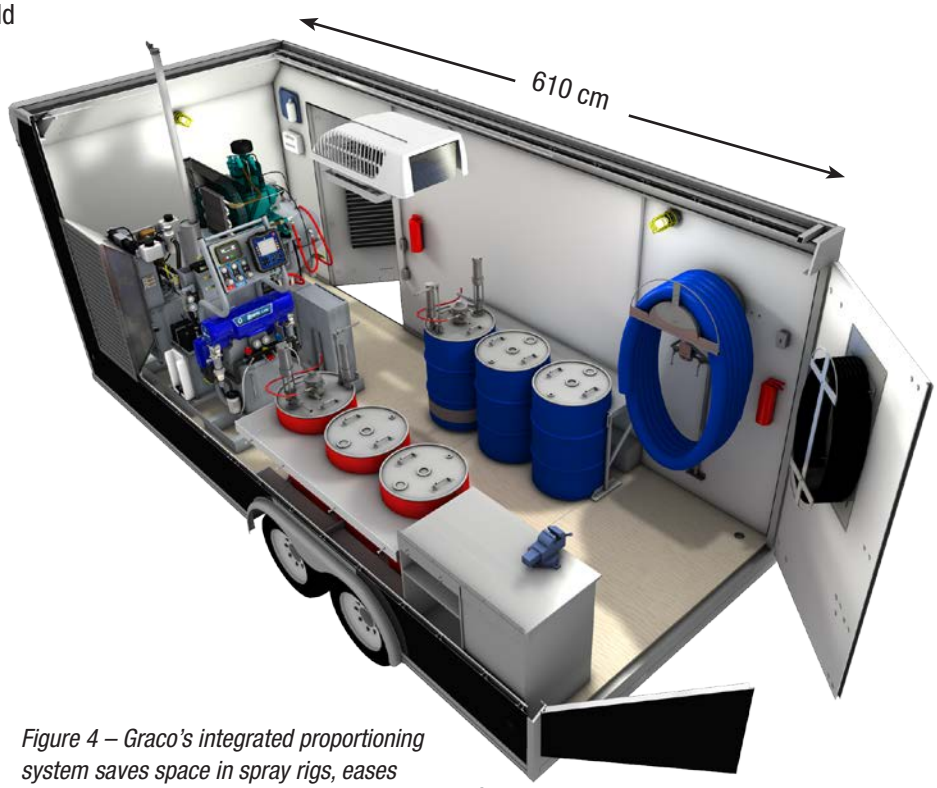

Figure 4 – Graco's integrated proportioning system saves space in spray rigs, eases installation, and uses less fuel to operate

Additionally, when distributors assemble spray rigs, they often place the generator in its own dedicated space to maximize engine ventilation and reduce noise. Although the new integrated system permits trailer/truck designs without a wall since the smaller engine produces less noise, the system allows a wall to be added between the engine and the proportioner if desired by the customer. A minimal amount of duct work from the trailer wall to the engine's radiator is all that is required for proper engine cooling. This brings the added benefits of reduced material cost and trailer build time.

Usability Considerations

The third key design area, usability and human factors, required a look at system service and repair as well as day-to-day system control. The end-user can access system controls for an air manifold, the engine, and the proportioner all in one convenient place. The layout of the engine and proportioner takes into account system service and repair where, for example, the chemical Y-strainers are raised to a more accessible height and include material feed pressure and temperature gauges. The new electrical enclosure design brings most proportioner wiring and auxiliary load wiring into a well-organized space, and simplifies diagnostics and repair. This also eliminates the cost of a separate circuit breaker panel for auxiliary electrical loads.

New Technologies Bring Benefits

The new integrated series of Reactor proportioners brings new technologies to portable polyurea and foam application systems. The biggest upgrades for contractors are co-generation and the related benefits of using of a smaller diesel generator, improvements to software control of temperature and pressure, and a completely redesigned electronic user interface.

Co-generation Technology Saves Fuel

Diesel engines, like all energy conversion equipment, are only partially efficient. As seen in Figure 5, roughly 30% of the energy put into a diesel engine is available to do mechanical work. Of this 30%, only 80% is turned into electrical energy due to generator inefficiencies. Roughly 76% of the fuel's energy is lost.

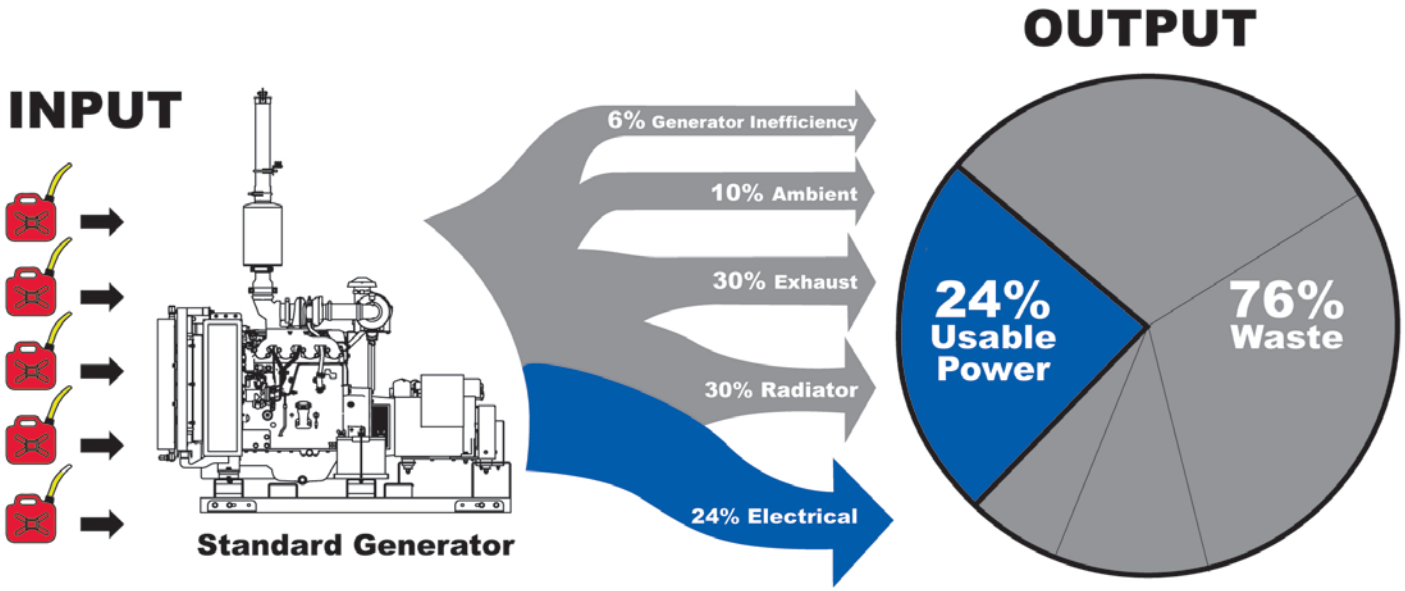

Figure 5 – Standard diesel generator efficiency

This is where the premise behind co-generation significantly benefits system efficiency and fuel savings. As previously discussed, co-generation refers to the production of both usable heat and electricity from the same power source. Because of reduced power requirements, a smaller generator was chosen that produced both enough power for electrical and compressed air loads, and provided enough excess heat to the radiator to heat the two material components sprayed by the proportioner. Co-generation provides essentially the same total usable output energy as the standard generator configuration, but with a significant reduction in input energy (fuel). (See Figure 6 on Page 6.)

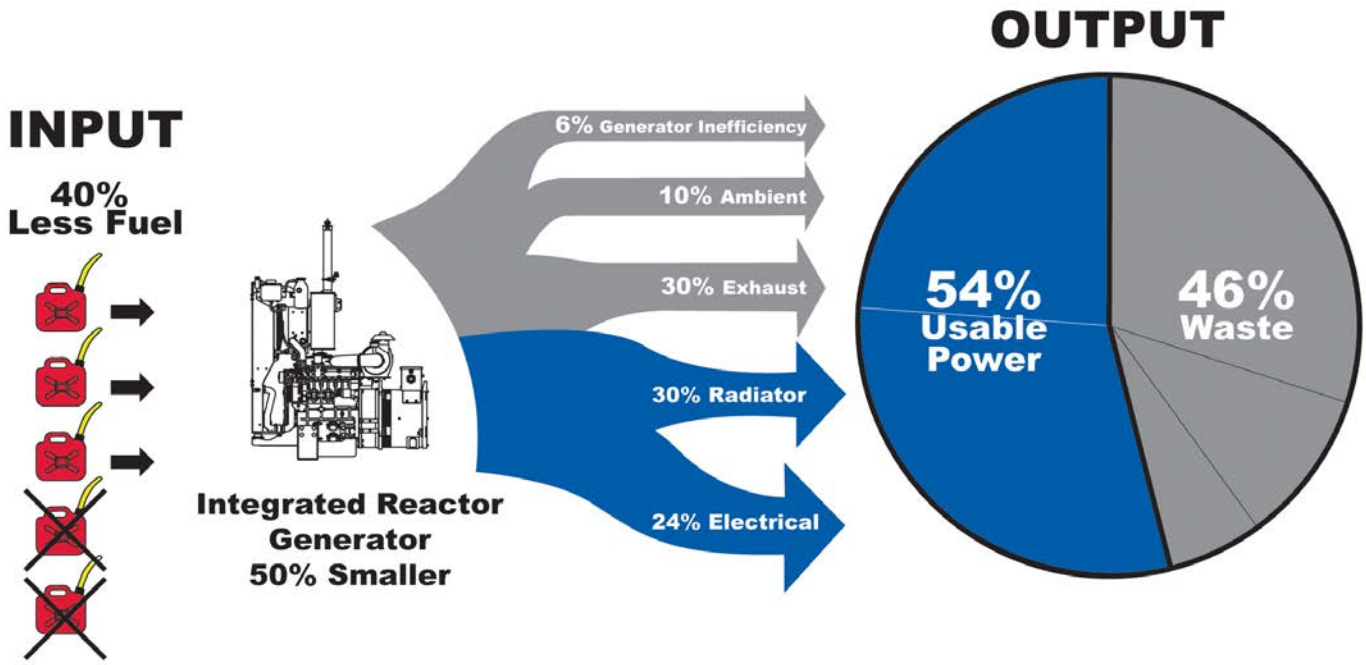

Figure 6 – Co-generation's benefit: less fuel into a smaller generator provides similar power output as from a larger generator

Of particular interest: fuel savings primarily comes from removing the large electrical load of the material heaters and not from reducing the generator size. It can be shown that the 22kW generator on the new integrated system uses less fuel than a standard Reactor proportioner powered by a 20kW generator. Note that fuel usage is proportional to the engine's mechanical load, not to the engine size.

In standard portable proportioner rigs, heat rejected from the engine's radiator is a by-product of generating usable mechanical/electrical power. The integrated Reactor proportioner has a significant advantage: it captures this by-product as usable energy in addition to lowering the mechanical/electrical energy requirements of the proportioner system.
Fuel savings follow. This makes the previous example clearer: the 22kW generator is operating at 25 to 50% of mechanical load on a regular basis while the 20kW is operating near 100% to keep up with the additional electrical heater load.

Heat that is usually lost through the radiator is captured from the engine's coolant and transferred to the material through a set of three heat exchangers and two coolant loops. Referring to Figure 7, heat is pulled from the engine coolant loop in heat exchanger 1 and transferred to the secondary coolant loop. The secondary loop holds the transferred heat in reserve until the Reactor calls for one or both materials to increase in temperature. In addition, it prevents the possibility of material leaking into the engine if a heat exchanger were to fail. Software control operates the three valves in the secondary loop, metering hot coolant through the A and B heat exchangers to carefully control the temperature of the material available from the proportioner. Excess heat that is not required to heat the material is removed from the engine through the radiator.

Figure 7. Heat capture and transfer from engine coolant to material

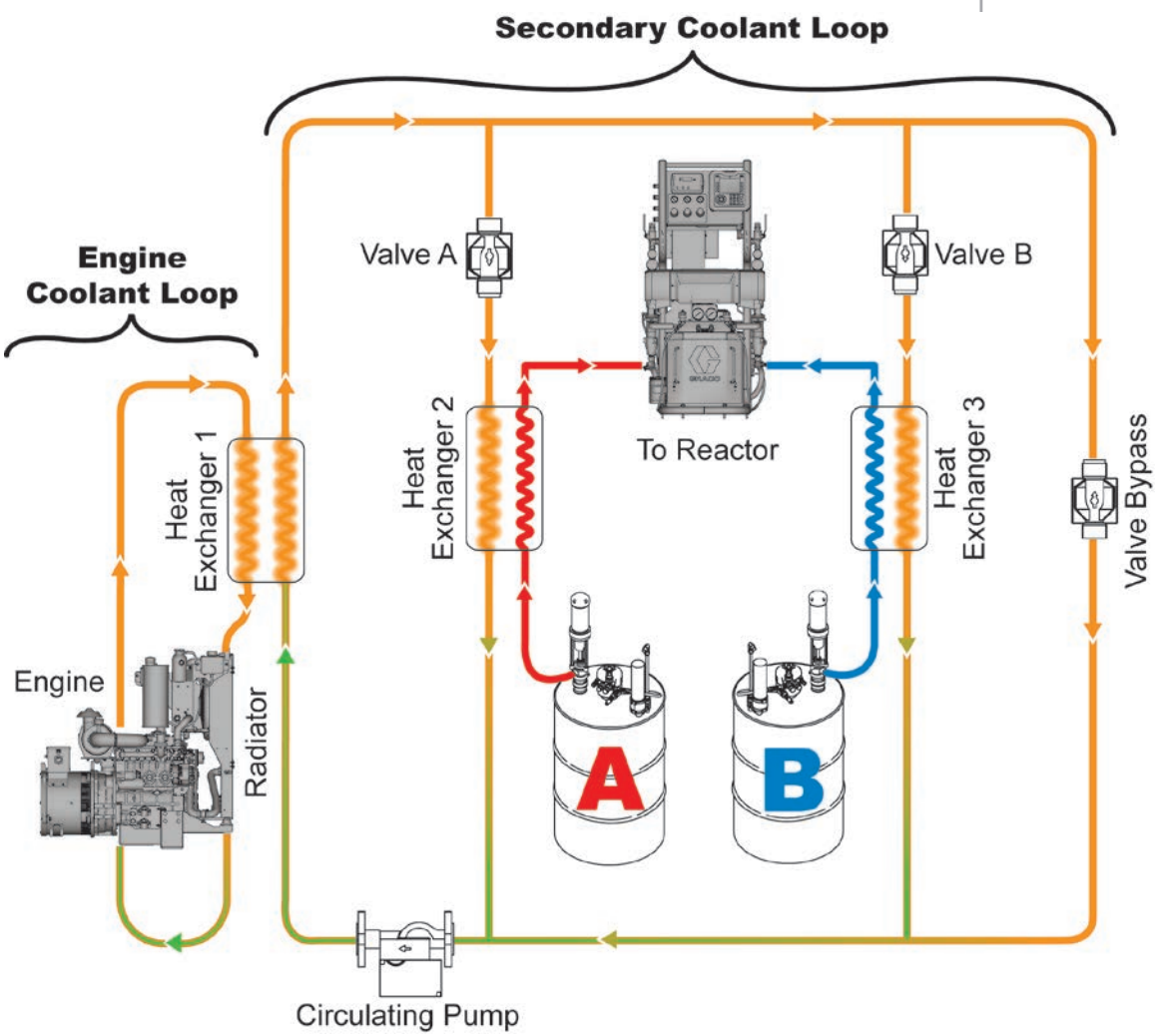

It should be noted that the heat exchanger system heats up the materials to a maximum of 60°C. If additional heat is needed, optional electric booster heaters can bring the material temperature to a maximum of 82°C. The best heat transfer is achieved with an appreciable temperature difference between the material and coolant. Engine coolant is typically 94°C , resulting in only a 11°C difference when the material temperature setting is 82°C .

It is likely, at high material flow rates, the small temperature difference would result in lower heat transfer, allowing the material temperature to drop below the 82°C set point. The addition of a small 4-kilowatt electric booster heater allows the system to make up the additional temperature change required for polyurea coatings. Despite this limitation, the system is capable of up to 56°C of temperature change without the optional booster heater and 78°C of temperature change with the optional booster heater, higher than the standard Reactor proportioner. An added benefit of splitting the heat rise is that the material entering the proportioner pumps is limited to a maximum temperature of 60°C, which retains expected pump seal life. Using this method provides equivalent material temperature control and repeatability compared with the standard Reactor proportioner, while still being significantly more energy efficient.

Energy efficiency is only part of the equation. Compared to a typical spray rig's 40 kilowatt generator, we see significant benefits when it comes to weight, size and noise. The integrated Reactor system pairs a 29 horsepower Perkins diesel engine with a 22 kilowatt Mecc Alte™ alternator. Table 1 contrasts a 40 kilowatt generator to the generator used in the integrated Reactor system.

Table 1. Advantages of the Integrated System Over a Standard System

	Generator on Standard System	Generator on Integrated System	Integrated Compared to Standard
Engine Horsepower	86 hp	29 hp	66% less
Alternator Output	40 kW	22 kW	45% less
Dimensions (LxWxH)	170 x 90 x 120cm	150 x 65 x 95cm	46% smaller
Generator Weight	860 kg	320 kg	63% lighter
Fuel Use Under Average Load	5,7 ltr/h	3,4 ltr/h	40% less

Software Controls

New capabilities were developed as part of the integrated system's new software controls. For example, improved pressure control minimizes drops in pressure during pump changeover – resulting in balanced static and dynamic (triggering) pressures for smooth spraying performance. Another energy efficiency increase was realized by using an electric fan on the engine radiator, instead of the typical belt driven option.
Through software control, this fan is cycled on and off to keep the engine and coolant at consistent, optimum operating temperatures, instead of rejecting more heat energy than necessary from the coolant as it passes through the radiator. Not only does the engine run more efficiently, it allows for storing of engine heat in the coolant system for periods of high material heat demand.

User Interface

The electronic user interface, called the Advanced Display Module (ADM), provides many new tools and an intuitive layout for basic day-to-day operation (Figure 8). The ADM oversees the network of control modules that operate the pump and heating systems, and monitors system temperatures and pressures. More specific error codes are provided than on the standard Reactor, aiding system troubleshooting. Detailed troubleshooting steps are provided on-screen for quick reference when an error is encountered. Data logging along with simple USB downloads offers the end-user in-depth historical information about the application of the material and system status.

The system can display the actual pressures of A and B materials simultaneously, helping balance pressures at startup and aiding the troubleshooting process. Drum level estimation, based on the number of pump cycles or strokes, can automatically shut down the proportioner when the material supply drums are nearly empty. Material recipe storage is now possible for users who spray multiple materials. The system also offers an optional remote display that can place monitoring and control functions in the contractor's hands — right at the gun.

Figure 8 – The Advanced Display Module provides an easy to use interface with detailed error codes, troubleshooting help, and data logging

Summary

The integrated series of Reactor proportioners provides several key benefits over a standard mobile spray rig, while providing equal or better functionality compared to the standard Reactor proportioner.

The system is a compact, completely turnkey solution. Installation is greatly simplified with a pre-wired generator, electrical panel, and air control manifold. There is an optional air compressor and air dryer that can come pre-installed on the system.

End-users can save significant fuel costs by using a smaller engine, utilizing the system's co-generation technology that heats A and B materials with less electricity. A fuel-use calculator is available online to determine expected annual fuel savings with a sprayer's required system configuration.

Using a Graco Fusion® Gun 02 mix chamber, the system is capable of a 56°C change in temperature and 78°C temperature change with added booster heat when starting at a 4°C material supply temperature. Both heat material faster than standard Reactor proportioners.

With a new electronic display and controls, the contractor gets more detailed error codes and advanced on-screen troubleshooting, USB flash drive job-data downloads, visual indicators of drum fluid level, user settable pressure imbalance shutdown, material recipe memory, and low material shutdown functions. A remote display located at the gun is available as an option.

Improved pressure control provides consistent spray pressure at the gun. There is less pressure drop between static and dynamic pressures as well as reduced pressure fluctuation during pump changeovers.

Overall, the contractor's cost to spray material is lower, helping drive market growth – both for material and its application. The significant time-saving and financial benefits of the integrated Reactor system clearly shows the power of joining co-generation technology with Graco's proportioners.

BIOGRAPHY

ARTHUR T. GRAF

Arthur Graf is an Electrical Design Engineer for the Applied Fluid Technologies Division of Graco Inc. and works in Minneapolis, MN.

© 2012 Graco Inc. 348761ENEU Rev. A 10/12 All written and visual data contained in this document are based on the latest product information available at the time of publication. Graco reserves the right to make changes at any time without notice. All other brand names or marks are used for identification purposes and are trademarks of their respective owners.