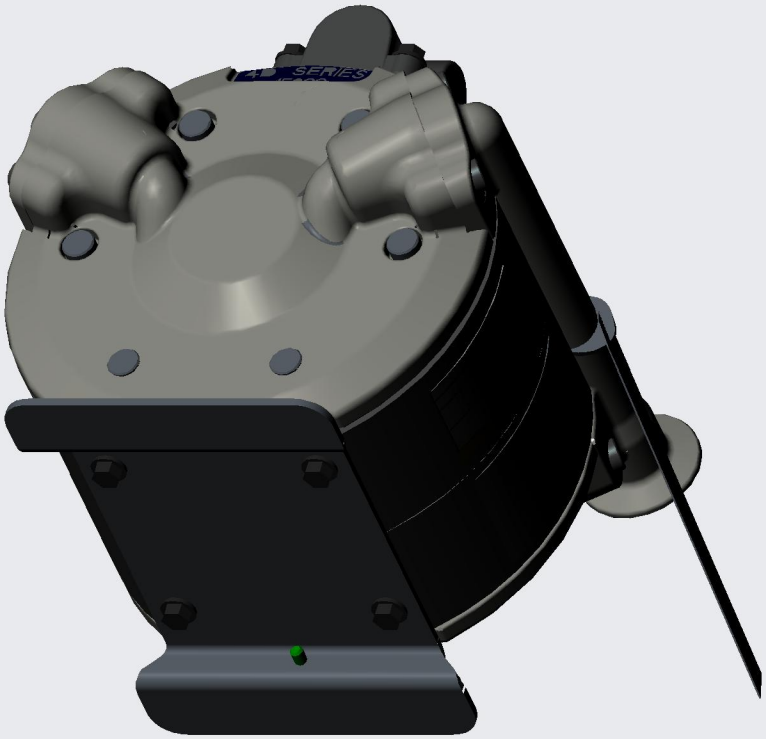
SERIES