Installation

E-Flo® 4-Ball Piston Pumps

311592Z

EN

Durable, energy efficient piston pumps for high volume paint circulation applications. For professional use only.

See page 3 for model information, including maximum working pressure. See page 5 for approvals.

Important Safety Instructions
Read all warnings and instructions in this manual.
Save these instructions.

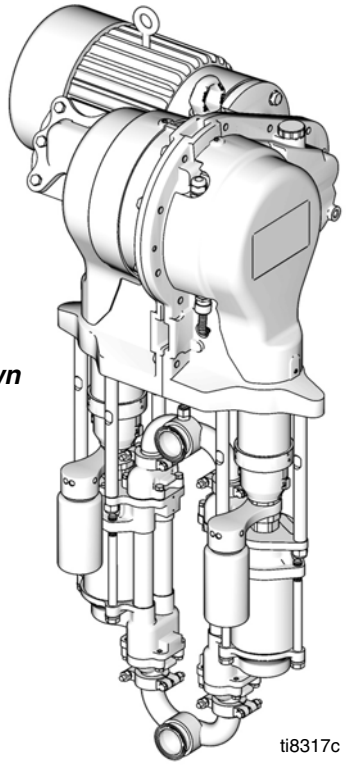

E-Flo 4000 Pump Shown

PROVEN QUALITY. LEADING TECHNOLOGY.

Contents

Related Manuals

Manual	Description
311593	E-Flo Operation Manual
311594	E-Flo Repair-Parts Manual
311595	Pneumatic Back Pressure Regulator
311596	Variable Frequency Drive Instructions
311603	Sensor Circuit Option
3A0539	4-Ball Lowers
3A0006	ACS Module

Models

E-Flo 4-Ball Piston Pumps

Check your pump's identification plate (ID) for the 6-digit part number of your pump. Use the following matrix to define the construction of your pump, based on the six digits. For example, Pump Part No. **E P 2 1 6 0** represents electric power (**E**), pump (**P**), 230/460V motor (**2**), sensor circuit installed (**1**), 2000 cc MaxLife lower (**6**), and no stand installed (**0**). To order replacement parts, see the Repair-Parts manual 311594.

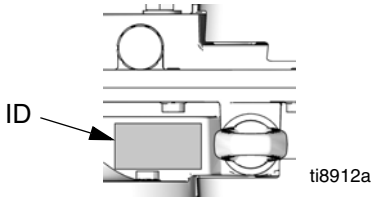

E	P	2		1		6		0	
First Digit	**Second Digit**	**Third Digit**		**Fourth Digit**		**Fifth Digit**		**Sixth Digit**	
Power Source	**Equipment Style**	**Motor**		**Sensor Circuit**		**Lower Size**		**Stand Option**	
E (electric)	P (pump)	0	No motor	0	No circuit installed	1	1000 cc Chrome	0	No stand installed
		1	230/400V, 5 HP, ATEX	1	Circuit installed	2	1500 cc Chrome	1	Stand installed
		2	230/460V, 5 HP, UL/CSA			3	2000 cc Chrome		
		3	230/400V, 3 HP, ATEX			4	1000 cc MaxLife®		
		4	230/460V, 3 HP, UL/CSA			5	1500 cc MaxLife		
						6	2000 cc MaxLife		
						7	750 cc Chrome		
						8	750 cc MaxLife		

Maximum Working Pressure and Pump Operational Limits

E-Flo 1500: 425 psi (2.93 MPa, 29.3 bar) Maximum Working Pressure
E-Flo 2000: 460 psi (3.22 MPa, 32.2 bar) Maximum Working Pressure
E-Flo 3000: 330 psi (2.31 MPa, 23.1 bar) Maximum Working Pressure
E-Flo 4000: 250 psi (1.75 MPa, 17.5 bar) Maximum Working Pressure

See **Technical Data,** page 26, for pump operational limits.

Approvals

The E-Flo Pump meets requirements of the following approval agencies.
Refer to the individual components for other specific hazardous location listings.

Component	Part No.	Approvals
Mechanical Pump		CE Ex II 2 G Ex h T3 Gb
Motor	**ATEX** EP1XXX EP3XXX	CE Ex II 2 G Ex de IIC T4 - CESI 05 ATEX 110X
	UL/CSA EP2XXX EP4XXX	UL CSA Class I, Group D, Class II, Group F and G, Division 1, T3B Hazardous Locations
IS Sensor Circuit	EPX1XX	CE FM APPROVED Class 1, Div. 1, Group C & D T3 Hazardous Locations Ex II 2 G EEx ib IIB Ta = 0°C - 50°C - FM 06 ATEX 0025U KCs Ex ib IIB Ta = 0°C - 50°C - KTL 13-KB4BO-0088

Warnings

The following warnings are for the setup, use, grounding, maintenance, and repair of this equipment. The exclamation point symbol alerts you to a general warning and the hazard symbols refer to procedure-specific risks. When these symbols appear in the body of this manual, refer back to these Warnings. Product-specific hazard symbols and warnings not covered in this section may appear throughout the body of this manual where applicable.

⚠WARNING

FIRE AND EXPLOSION HAZARD

Flammable fumes, such as solvent and paint fumes, in **work area** can ignite or explode. To help prevent fire and explosion:

- Use equipment only in well ventilated area.
- Eliminate all ignition sources; such as pilot lights, cigarettes, portable electric lamps, and plastic drop cloths (potential static arc).
- Keep work area free of debris, including solvent, rags and gasoline.
- Do not plug or unplug power cords, or turn power or light switches on or off when flammable fumes are present.
- Ground all equipment in the work area. See **Grounding** instructions.
- Use only grounded hoses.
- Hold gun firmly to side of grounded pail when triggering into pail.
- If there is static sparking or you feel a shock, **stop operation immediately.** Do not use equipment until you identify and correct the problem.
- Keep a working fire extinguisher in the work area.

Static charge may build up on plastic parts during cleaning and could discharge and ignite flammable vapors. To help prevent fire and explosion:

- Clean plastic parts only in a well ventilated area.
- Do not clean with a dry cloth.
- Do not operate electrostatic guns in equipment work area.

EQUIPMENT MISUSE HAZARD

Misuse can cause death or serious injury.

- Do not operate the unit when fatigued or under the influence of drugs or alcohol.
- Do not exceed the maximum working pressure or temperature rating of the lowest rated system component. See **Technical Data** in all equipment manuals.
- Use fluids and solvents that are compatible with equipment wetted parts. See **Technical Data** in all equipment manuals. Read fluid and solvent manufacturer's warnings. For complete information about your material, request MSDS forms from distributor or retailer.
- Check equipment daily. Repair or replace worn or damaged parts immediately with genuine manufacturer's replacement parts only.
- Do not alter or modify equipment.
- Use equipment only for its intended purpose. Call your distributor for information.
- Route hoses and cables away from traffic areas, sharp edges, moving parts, and hot surfaces.
- Do not kink or over bend hoses or use hoses to pull equipment.
- Keep children and animals away from work area.
- Comply with all applicable safety regulations.

⚠WARNING

	**ELECTRIC SHOCK HAZARD** Improper grounding, setup, or usage of the system can cause electric shock. • Turn off and disconnect power at main switch before disconnecting any cables and before servicing equipment. • Connect only to grounded power source. • All electrical wiring must be done by a qualified electrician and comply with all local codes and regulations.
	**PRESSURIZED EQUIPMENT HAZARD** Fluid from the gun/dispense valve, leaks, or ruptured components can splash in the eyes or on skin and cause serious injury. • Follow **Pressure Relief Procedure** in this manual, when you stop spraying and before cleaning, checking, or servicing equipment. • Tighten all fluid connections before operating the equipment. • Check hoses, tubes, and couplings daily. Replace worn or damaged parts immediately.
	**MOVING PARTS HAZARD** Moving parts can pinch or amputate fingers and other body parts. • Keep clear of moving parts. • Do not operate equipment with protective guards or covers removed. • Pressurized equipment can start without warning. Before checking, moving, or servicing equipment, follow the **Pressure Relief Procedure** in this manual. Disconnect power or air supply.
	**TOXIC FLUID OR FUMES HAZARD** Toxic fluids or fumes can cause serious injury or death if splashed in the eyes or on skin, inhaled, or swallowed. • Read MSDS's to know the specific hazards of the fluids you are using. • Store hazardous fluid in approved containers, and dispose of it according to applicable guidelines. • Always wear impervious gloves when spraying or cleaning equipment.
	**PERSONAL PROTECTIVE EQUIPMENT** You must wear appropriate protective equipment when operating, servicing, or when in the operating area of the equipment to help protect you from serious injury, including eye injury, inhalation of toxic fumes, burns, and hearing loss. This equipment includes but is not limited to: • Protective eyewear • Clothing and respirator as recommended by the fluid and solvent manufacturer • Gloves • Hearing protection
	**BURN HAZARD** Equipment surfaces and fluid that's heated can become very hot during operation. To avoid severe burns, do not touch hot fluid or equipment. Wait until equipment/fluid has cooled completely.

System Components

FIG. 1 illustrates a typical North American system installation, showing the major system components. Also see the wiring schematic in FIG. 2 and FIG. 3.

Hazardous Area

Do not install equipment approved only for non-hazardous locations in a hazardous area.

See FIG. 1. The following system components are approved for use in a hazardous area:

- E-Flo Electric Circulation Pump
- Explosion-Proof Electric Motor
- Local Control Box (accessory)
- Pneumatic Back Pressure Regulator (accessory)
- Sensor Control Circuit (option). See intrinsic safety installation requirements below.

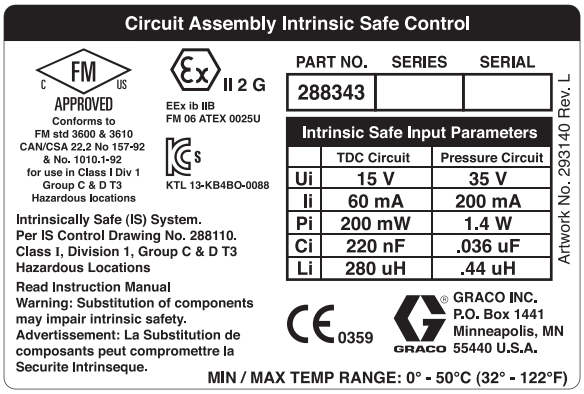

Schedule of Limitations
ATEX:

1. *After the installation of the Electric Circulation Pump Control into an enclosure the creepage and clearance distances shall meet the requirements of 6.4 (Table 4) of EN50020.*
2. *After the installation of the Electric Circulation Pump Control into an enclosure the assembly shall be capable of withstanding an r.m.s. a.c. test voltage of twice the voltage of the intrinsically safe circuit or 500 V, whichever is the greater.*

Sensor Circuit Wetted Parts
Pressure transducer: 17-4 PH stainless steel

NOTE: All other components shown in FIG. 1 **must** be installed in a **non-hazardous area**.

Non-Hazardous Area

See FIG. 1. Install the following components in a non-hazardous area:

- System Power Disconnect Switch
- Electrical Noise Filter (accessory)
- Variable Frequency Drive (accessory)
- Power Module (accessory)
- 3-Way Pneumatic Solenoid Valve (accessory)

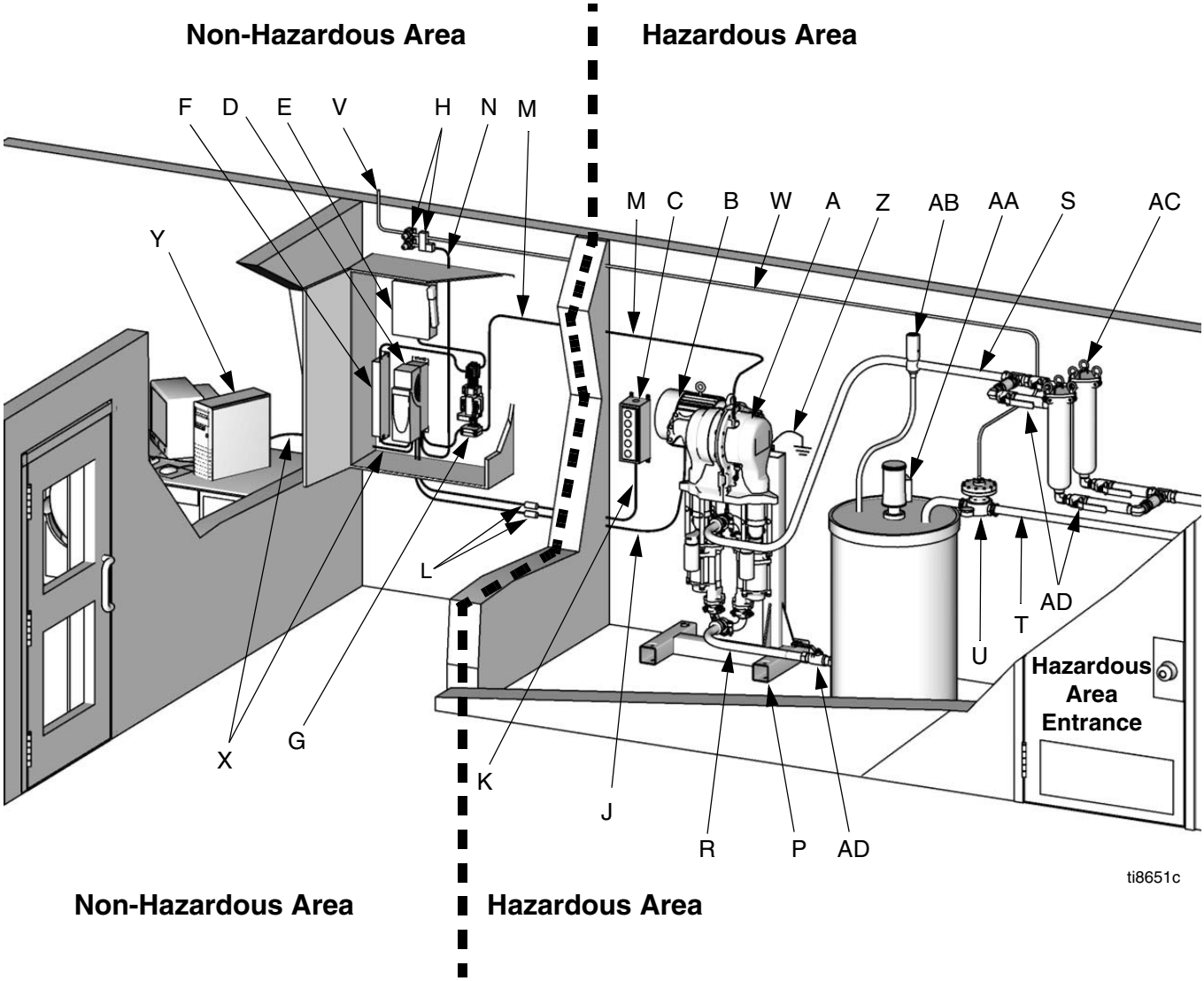

FIG. 1: Typical Installation

Key:

A E-Flo Electric Circulation Pump
B* Explosion-Proof Electric Motor
C* Local Control Box
D* Variable Frequency Drive (VFD)
E** System Power Disconnect Switch
F* Electrical Noise Filter
G* Power Module
H* VFD/BPR Pneumatic Control Kit
J** Electric Power Cable, VFD to Electric Motor
K** Electric Control Cable, Local Control Box to VFD
L** Explosion-Proof Seal Fittings
M** Electric IS Control Cable, Power Module to Pump Sensor Circuit
N** Electric Cable, VFD to 3-Way Solenoid Valve (2 meters provided by Graco)
P* Pump Stand
R** Fluid Inlet Line
S** Fluid Outlet Line
T** Fluid Return Line
U* Pneumatic Back Pressure Regulator
V** Air Supply Lines to 3-Way Solenoid Valve
W** Air Line, Solenoid Valve to Back Pressure Regulator
X** Ethernet Cable, VFD to Computer
Y** Personal Computer
Z** Pump Ground Wire
AA* Explosion-Proof Electric Agitator
AB** Pressure Relief
AC* Fluid Filters
AD* Fluid Line Isolation Valves

* *Option available from Graco.*
** *Supplied by integrator.*

System Wiring Schematics

For use with Variable Frequency Drive (VFD) Accesory

FIG. 2 shows components that must be installed in a non-hazardous location.

FIG. 3 shows components approved for installation in a hazardous location, and FIG. 4 shows detail views of hazardous location components.

NON-HAZARDOUS AREA

1. 12 Gauge Alpha Wire P/N V16012/equiv.
2. 16 Gauge MTW Wire.
3. Blue/White 16 Gauge MTW Wire.
4. Blue 16 Gauge MTW Wire.

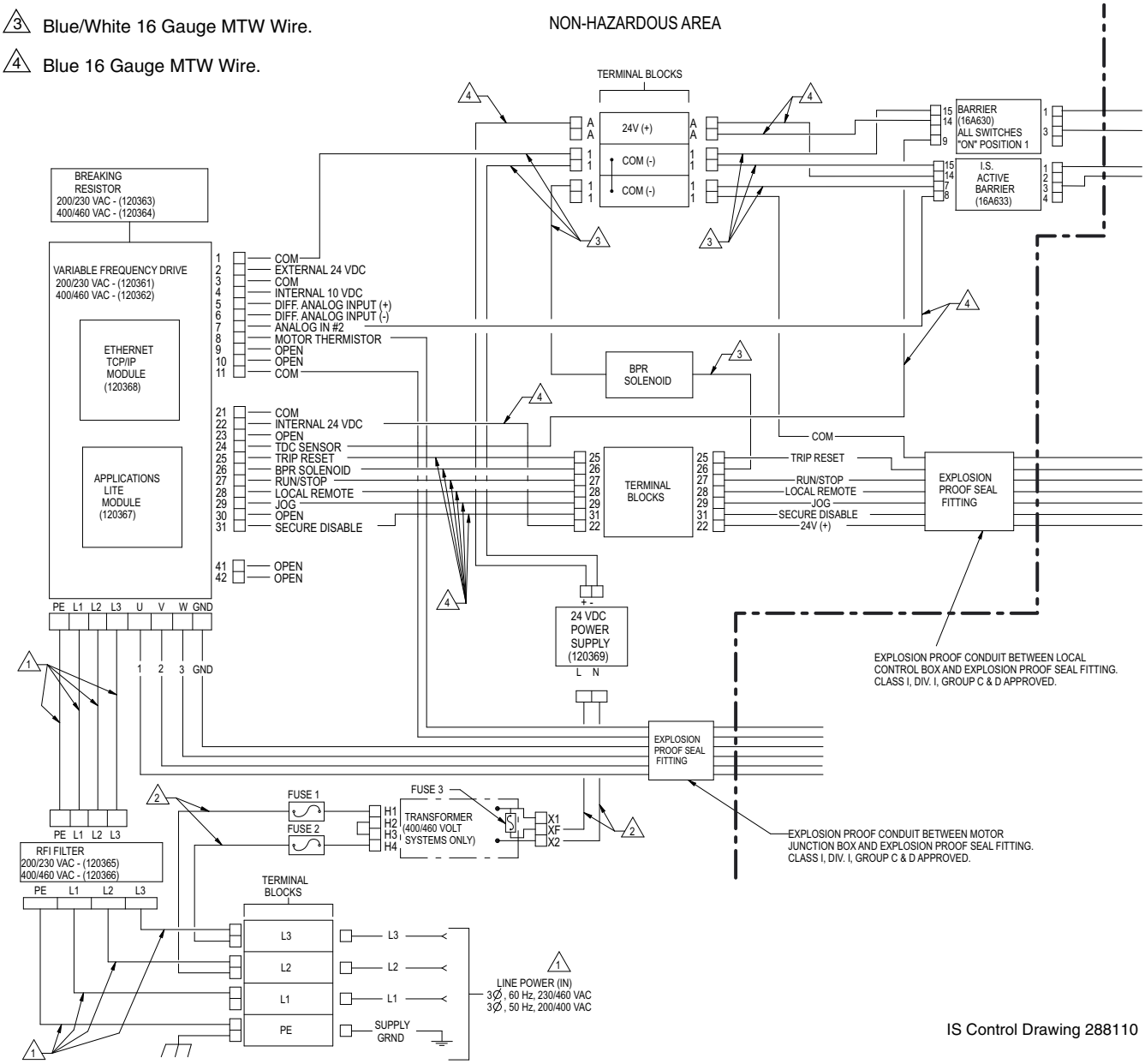

FIG. 2: System Wiring Schematic, Non-Hazardous Location Only

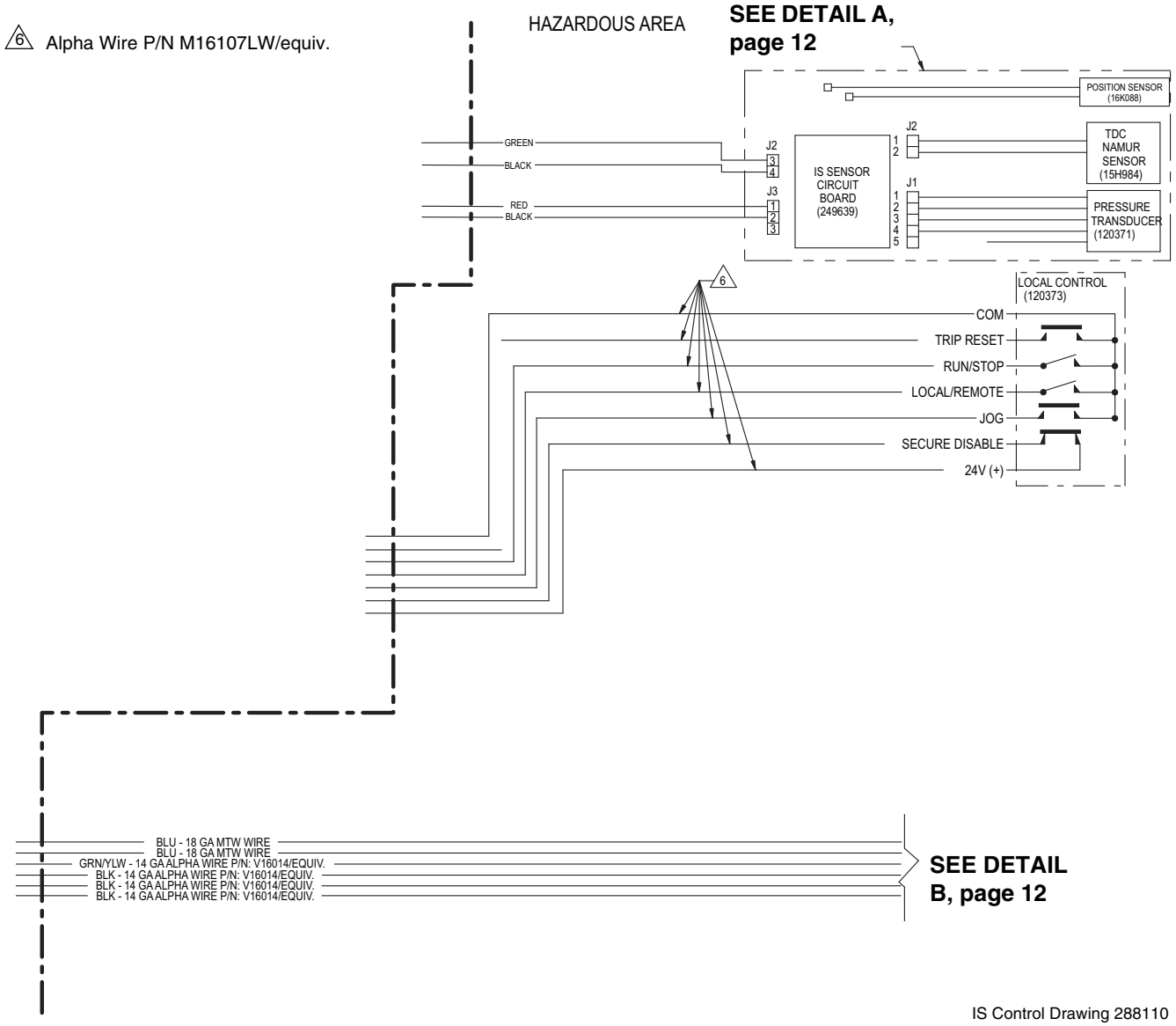

FIG. 3: System Wiring Schematic, Hazardous Location

DETAIL A

HAZARDOUS (CLASSIFIED) LOCATION
CLASS I, DIV. 1, GROUP C & D, T3 (FM ONLY)
GROUP II, CATEGORY 2 - ZONE 1, GAS (ATEX ONLY)
CLASS I, DIV. 1, GROUP C & D T3 (CANADA)

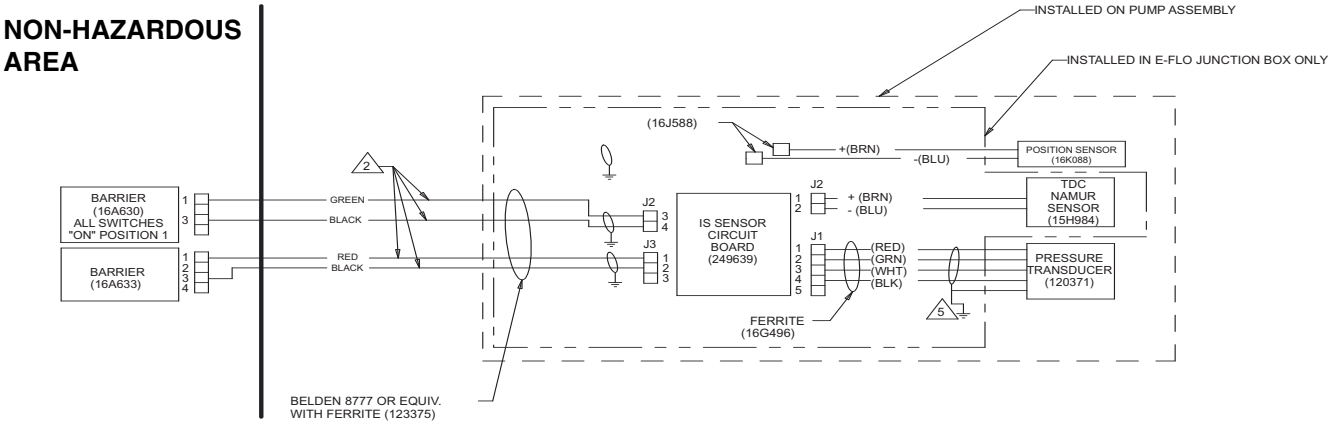

1 The installation must meet the requirements of the National Electric Code, Canadian Electrical Code Part I, Article 504, NFPA 70, and ANSI/ISA 12.06.01.

2 Individually shielded cables needed to ensure separation of sensor and transducer circuits.

3 The voltage (Vmax or Ui), current (Imax or Ii), and power (Pi) must be equal to or greater than the voltage (Voc, Uo, or Vt), current (Isc, Io, or It), and power (Po or Pt) levels, which can be delivered by the associated apparatus. In addition, the maximum unprotected capacitance (Ci) and inductance (Li) of the intrinsically safe apparatus, including interconnecting wiring, must be less than the capacitance (Ca) and inductance (La) which can be safely connected to the associated apparatus.

5 Land shield drain and foil to conductive strain relief.

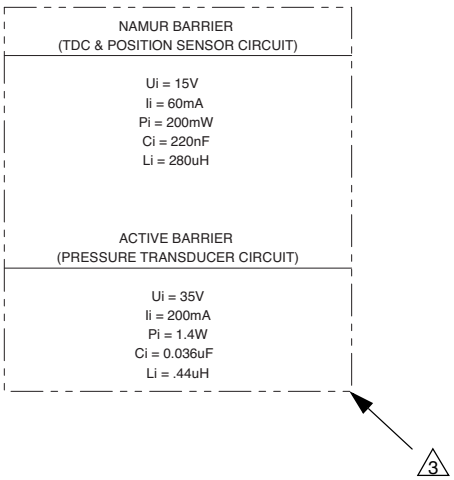

DETAIL B

HAZARDOUS AREA

SEE PAGE 11

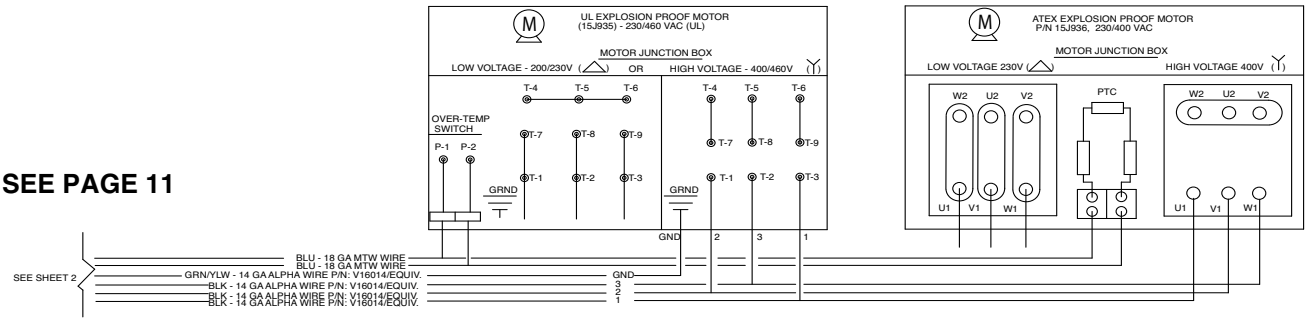

IS Control Drawing 288110

FIG. 4: System Wiring Schematic, Hazardous Location Detail Views

Power Supply Requirements

Improper wiring may cause electric shock or other serious injury if work is not performed properly. Have a qualified electrician perform any electrical work. Be sure your installation complies with all National, State and Local safety and fire codes.

See TABLE 1 for power supply requirements. The system requires a dedicated circuit protected with a 20 A circuit breaker.

Table 1: Power Supply Specifications

Voltage	Phase	Hz	Minimum Circuit Breaker Size
230/400V	3	50/60	20 A/15 A
230/460V	3	50/60	20 A/15 A

Power Disconnect Switch

See FIG. 1 on page 9. Install a power disconnect switch (E) in the non-hazardous area. This switch must shut off and lock-out all electric power to the system.

Hazardous Area Cabling and Conduit Requirements (Explosion Proof)

All non-intrisically safe wiring in the hazardous area must be encased in Class I, Division I, Group C and D approved explosion-proof conduit.

Wire passages from the hazardous to the non-hazardous area must be secured by explosion-proof seal fittings (L).

Increased Safety (European)

Use appropriate cables, connectors, and cable glands rated for ATEX II 2 G. Follow all National and Local electric codes.

Table 2: Cabling Specifications

Connection Points	Wire Size, AWG (mm^2)	Maximum Length ft (m)
VFD to Motor	14 (2.5)	330 (100)
Motor Overtemperature Switch to VFD	18 (0.75)	330 (100)
Local Control Box to VFD	16 (1.5)	330 (100)

16D612 Power Module

The 16D612 Power Module transforms the high voltage power supply to a 24 Vdc input for the pump sensor circuit. See manual 311608 for further information.

See FIG. 1 on page 9. Install the power module (G) in the non-hazardous area.

See FIG. 2 Electrical Schematic for module wiring connections.

Pressure Transducer Grounding Requirements

The pressure transducer cable (25a) shield and drain wire is grounded through metal-to-metal contact with the transducer conductive strain relief (35). See FIG. 5.

Ensure that the conductive strain relief (35) is screwed tightly into the housing, to ensure electrical continuity to the pump housing.

Tighten the nut (N) on the conductive strain relief (35) securely to ensure that the shield and drain wire (G) has firm metal-to-metal contact between the nut and bushing (B). Ensure that the ferrite (76) is attached around the transducer leadwires, and is located inside the circuit board compartment.

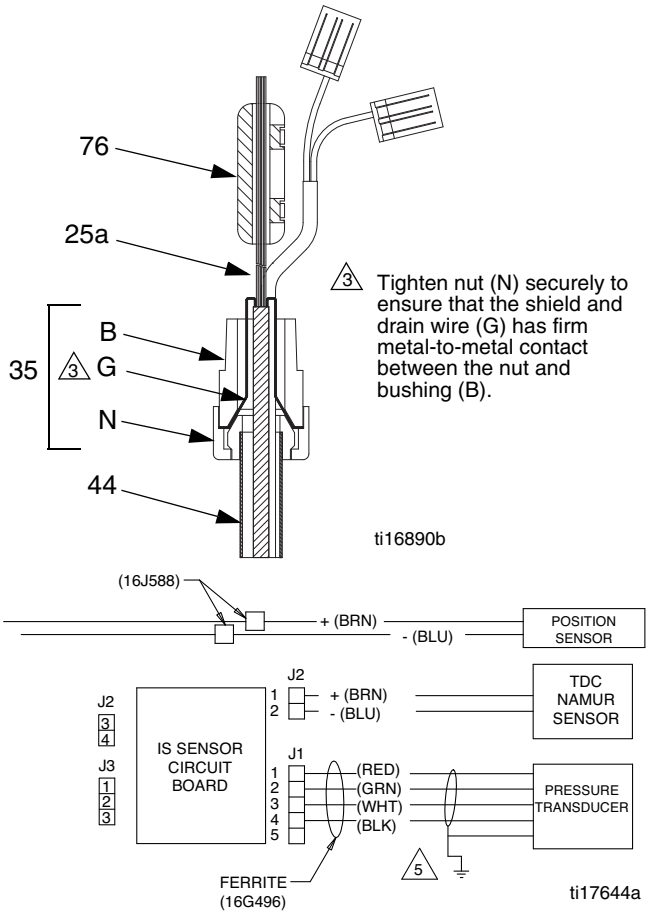

5 Land shield drain and foil to conductive strain relief.

FIG. 5. Transducer Cable Grounding

IS Field Wiring Grounding Requirements

The IS field wire is grounded through the grounding screw in the junction box. See FIG. 6.

Ensure that the conductive strain relief (74a) is screwed tightly into the housing. Units with a sensor circuit **must** use the conductive strain relief to ensure proper shielding of the IS field wire.

Thread the IS field wire through the conductive strain relief (74a) and connect it to J2 and J3 on the circuit board. See FIG. 6 and the **System Wiring Schematics**, page 11.

See FIG. 6. Tighten the nut (N) on the conductive strain relief (74a) securely. Install the ferrite (77) on the field wire (F), not more than 2 in. (51 mm) from the bottom of the conductive strain relief (74a). Install ground wire (G) to grounding screw in junction box.

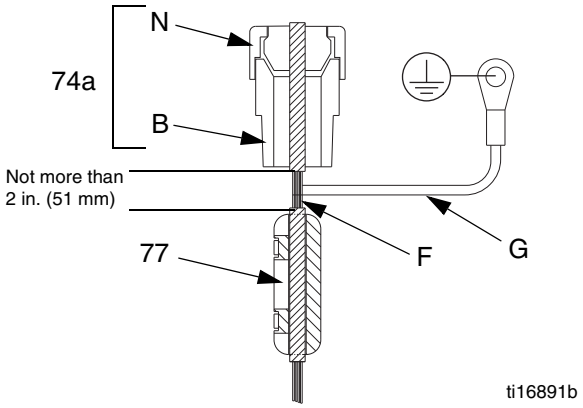

FIG. 6. IS Circuit Field Wire

Pump Location

Environmental Conditions

See **Technical Data**, page 26, for recommended ambient temperature range and environmental conditions.

Clearance

When selecting the location for the pump, keep the following in mind:

- There must be sufficient space on all sides of the pump for installation, operator access, repair, and air circulation. See **Dimensions**, page 23. See manual 311593 for maintenance requirements.
- Ensure that the mounting surface and mounting hardware are strong enough to support the weight of the equipment, fluid, hoses, and stress caused during operation.
- There must be a pump disable switch within easy reach of the pump. The Secure Disable switch on the Local Control Box Accessory provides this function. See page 21.

15H884 Floor Stand

Floor Stand 15H884 is available as an option. See 406638 for assembly and mounting instructions.

Connect Fluid Lines

See FIG. 7. The fluid manifolds are secured to the pumps with 1-1/2 in. clamps and sanitary gaskets (CG). Manifolds can be oriented in either direction. Connect the fluid line (R) to the manifold (MF) using 2 in. clamps and sanitary gaskets (SC). Graco recommends a minimum suction tube size of 1-1/4 in. (31.8 mm). Optional fittings are available. See TABLE 3.

Table 3: Fluid Fittings, Clamps, and Sanitary Gaskets

Part No.	Description
15J423	Converts 2 in. sanitary to 2 in. npt adapter
15J422	Converts 1-1/2 in. sanitary to 1-1/2 in. npt adapter
15J639	Converts 2 in. sanitary to 1-1/2 in. sanitary reducer adapter
120350	1-1/2 in. Sanitary Clamp
120620	2 in. Sanitary Clamp
120631	2 in. Sanitary Gasket, PTFE
680454	1-1/2 in. Sanitary Gasket, Virgin PTFE
120351	1-1/2 in. Sanitary Gasket, PTFE encapsulated fluoroelastomer

⚠1 Use 120351 Gaskets at these locations.

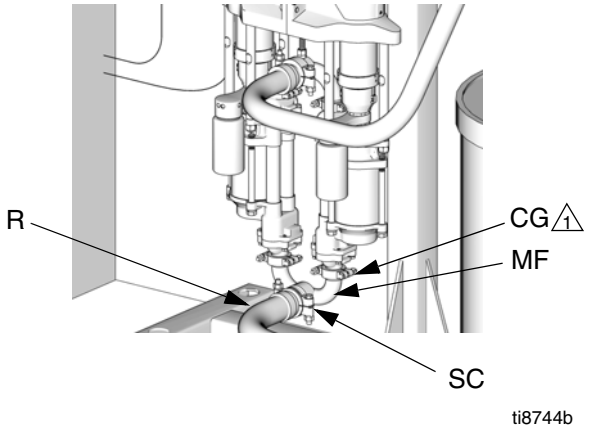

FIG. 7. Fluid Connection (Pump Inlet, E-Flo 4000 Shown)

Electric Motor

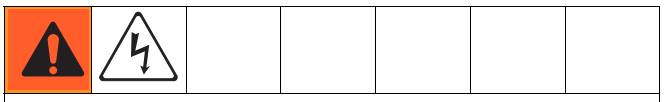

Improper wiring may cause electric shock or other serious injury if work is not performed properly. Have a qualified electrician perform any electrical work. Be sure your installation complies with all National, State and Local safety and fire codes.

Electric Motor Specifications

The electric motor must be approved as explosion-proof for use in a hazardous area. See **Approvals**, page 5, for applicable agencies and requirements. All wiring must meet Local and National electric codes for hazardous area.

See TABLE 4 for motor specifications. If motor is not purchased with pump, adapter kits are available. See TABLE 5 on page 17.

NOTE: Graco does not support the use of the Graco VFD CAM mode on motors not supplied by Graco.

Motor Wiring

See the **System Wiring Schematics** on pages 10 and 11.

Install an explosion-proof seal fitting in the wall separating the hazardous area from the non-hazardous area.

Use explosion-proof conduit or increased safety protection concepts to run wires between the motor junction box and the variable frequency drive (VFD).

Use 14 gauge wire (3 wires plus ground) to connect the VFD and the motor.

Use 18 gauge wire between pins 8 and 11 on the VFD and the motor overtemperature switch.

Motor must be wired to rotate fan counter-clockwise when viewed from fan end of motor. See FIG. 9 or FIG. 10.

Table 4: Electric Motor Specifications

Motor Kit Part No.	Voltage	Phase	Supply Frequency	Horsepower	rpm	Full Load Torque
255226	230/400V	3	50 Hz	5	1500 (4 pole)	15 ft-lb (20.3 N•m)
255225	230/460V	3	60 Hz	5	1800 (4 pole)	15 ft-lb (20.3 N•m)
289552	230/400V	3	50 Hz	3	1500 (4 pole)	9.1 ft-lb (12.3 N•m)
289551	230/460V	3	60 Hz	3	1800 (4 pole)	9.1 ft-lb (12.3 N•m)
NOTE: The motor must be rated for use with a VFD. The motor must be able to operate at full current through the range of 5-50 Hz or 6-60 Hz.						

Install the Motor

NOTE: A NEMA 182/184 TC Frame is required to mate with the gear reducer. If the pump is purchased without a motor, you must order a kit to mate with the gear reducer. See TABLE 5.

Table 5: Motor Adapter Kits

Kit No.	Description
16C487	Coupler Kit for NEMA 182-184 TC Frame 3 or 5 HP motors. Includes 2.25 in. (57.2 mm) key★. See manual 311605.
15H880	Coupler Kit for NEMA 182/184 TC Frame 3 or 5 HP motors. Includes 1.75 in. (44.5 mm) key★. See manual 311605.
24E453	Mounts IEC 112M/B5 or 100L/B5 Frame 3 or 5 HP motor to gear reducer★. See manual 311605.
★**NOTE:** All kits include the 0.62 in. (15.7 mm) key (120376). Some kits include an additional motor shaft key. Measure the length of the motor keyway to determine the correct key length. Key length should be at least 90% of keyway length.	

1. Thoroughly clean the input shaft and motor shaft, removing any debris. This ensures proper clearance and fit for the coupler.

NOTE: Do not reuse old keys or setscrews. Use only the parts supplied with the coupler.

2. See FIG. 8. Assemble the key (20) in the input shaft (105) keyway. Assemble the two setscrews (31) in the coupler (28), ensuring that they do not encroach on the keyway or the input shaft bore of the coupler.

3. Slide the coupler into the gear reducer so the key and input shaft mate with the coupler. Slide on until coupler bottoms out on the tapered step of the shaft.

NOTICE

Ensure that neither the input key (20) or the end of the coupler (28) motor shaft bore extend past the end of the input shaft (105). This could cause the motor shaft to bottom out on the coupler, causing excessive heat and bearing damage.

4. Tighten setscrews to 66-78 in-lb (7.4-8.8 N•m). Apply antiseize lubricant (LPS®-04110 or equivalent) to bore of coupling.

NOTE: When installing an IEC 112M/B5 or 100L/B5 Frame electric motor, ensure that the motor adapter (MA) and screws (MS) are in place before mounting the motor on the gear reducer. Torque screws to 40-45 ft-lb (54-61 N•m). See FIG. 10.

NOTICE

When installing the electric motor, always ensure that the motor shaft key cannot move out of position. If the key works loose it could cause excessive heat and equipment damage.

NOTE: A faint clicking may be heard while the motor is running. This is normal and is due to necessary clearances between the coupler (28), motor shaft, and motor key. If the intensity increases significantly over time, it could indicate the coupler is wearing and should be replaced. **Do not open the gear reducer. Opening the gear reducer voids the warranty.** The gear reducer is not field serviceable beyond the maintenance recommended in this manual.

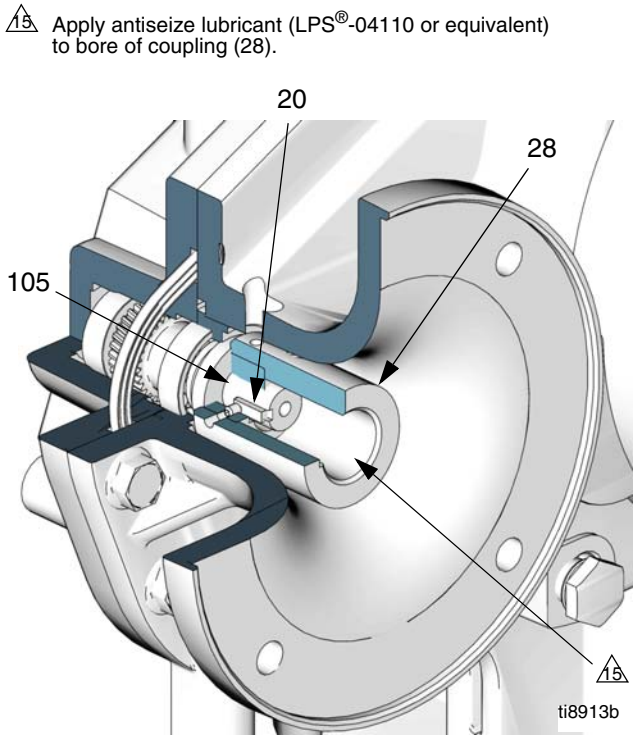

FIG. 8. Install the Coupler

5. See FIG. 9 or FIG. 10. Lift the motor (19) into position. Align the key on the motor shaft with the mating slot of the motor coupler, and the four mounting holes with the holes in the gear reducer (1). Slide the motor into place.

6. While one person supports the motor (19), install the screws (37). Torque to 75-80 ft-lb (102-108 N•m).

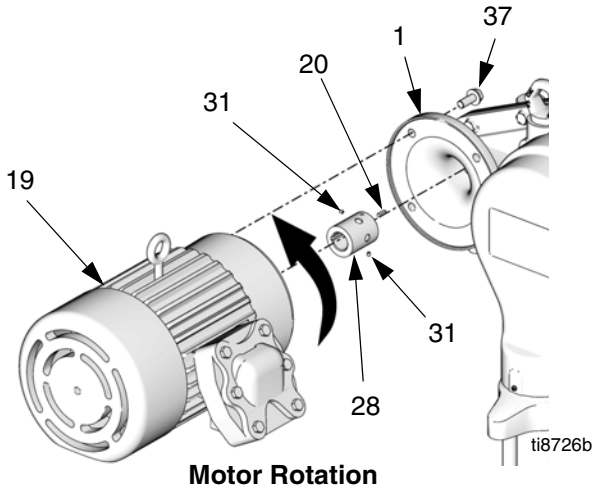

Motor Rotation
(counter-clockwise as viewed from fan end)

FIG. 9. All NEMA 182/184 TC Frame Electric Motors

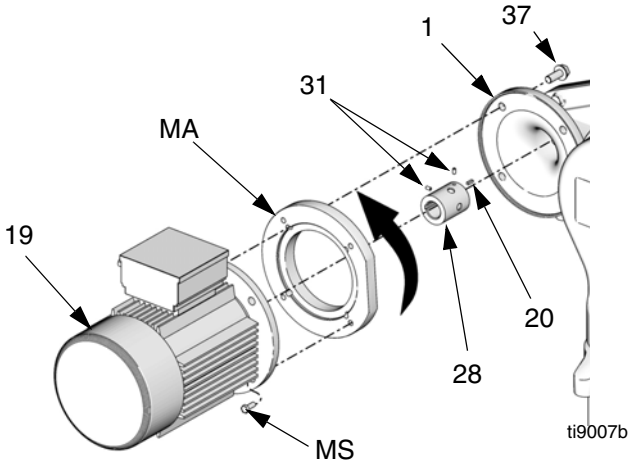

Motor Rotation
(counter-clockwise as viewed from fan end)

FIG. 10. IEC 112M/B5 and 100L/B5 Frame Electric Motors

Electrical Noise Filter

See FIG. 1 on page 9 and FIG. 2 Electrical Schematic on page 10. Install the electrical noise filter in the non-hazardous area, upstream of the VFD.

Graco supplies accessory noise filters, depending on your system voltage. See TABLE 6.

Table 6: Electrical Noise Filters

Part No.	Rated Voltage	Amps	Mounting Hole Diagram
120365	230 Vac	32	FIG. 11
120366	480 Vac	16	FIG. 12

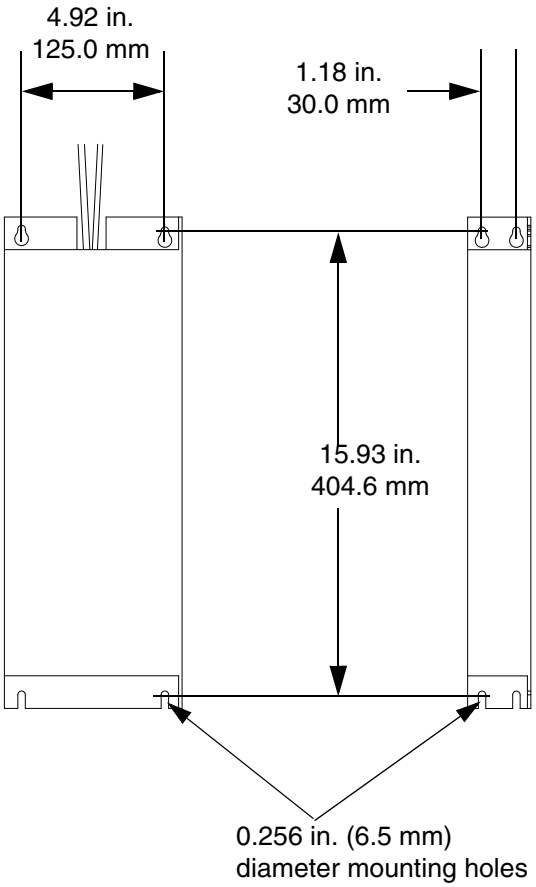

FIG. 11. 120365 Filter Mounting Holes

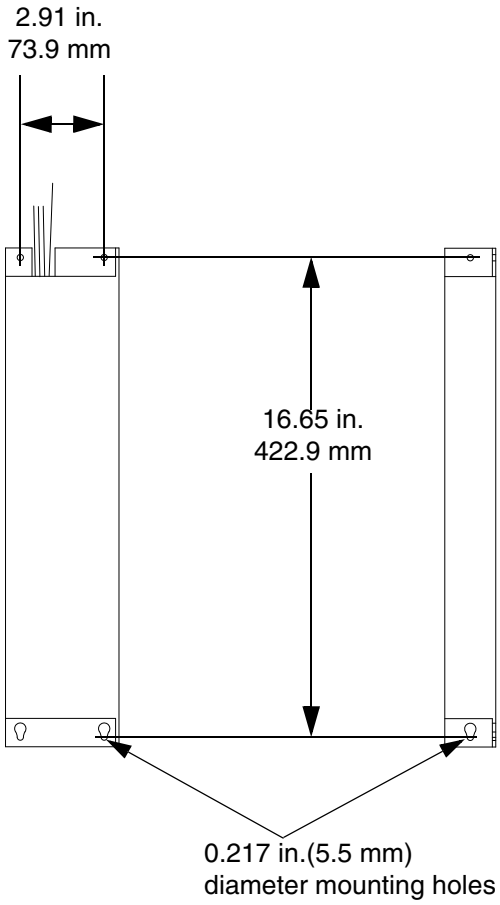

FIG. 12. 120366 Filter Mounting Holes

Variable Frequency Drive Accessory (VFD)

Use a variable frequency drive (VFD) accessory to provide motor drive control to the pump. Graco supplies accessory VFDs that optimize pump performance. Order Part No. 15J753 (200-240 Vac) or 15J754 (380-480 Vac), depending on your system voltage.

See VFD manual 311596 for further information.

VFD Installation

See FIG. 1 on page 9. Install the VFD (D) in the non-hazardous area.

Install an electrical noise filter (F) upstream of the VFD. See page 19.

VFD Wiring

See FIG. 2 Electrical Schematic on page 10f or VFD wiring connections.

- Connect 14 gauge or larger wires to terminals U, V, W, and GND on the VFD. See **Motor Wiring**, page 16.
- Connect 18 gauge wires between pins 8 and 11 on the VFD and the motor overtemperature switch.

ACS Module (Optional)

The advanced motor control system provides optimal control of paint circulating systems when used with an E-Flo pump and a Variable Frequency Drive Accessory. Order ACS module kit 24H372. The kit includes manual 3A0006.

ACS Wiring

See ACS manual 3A0006 for further information.

Ethernet Interface (optional)

To operate the system from a personal computer, order Ethernet Interface Kit 15H885 for the VFD. See FIG. 13. The kit includes manual 311612.

See FIG. 1 on page 9. Use Category V Ethernet cable (X) to connect the computer (Y) to the VFD (D).

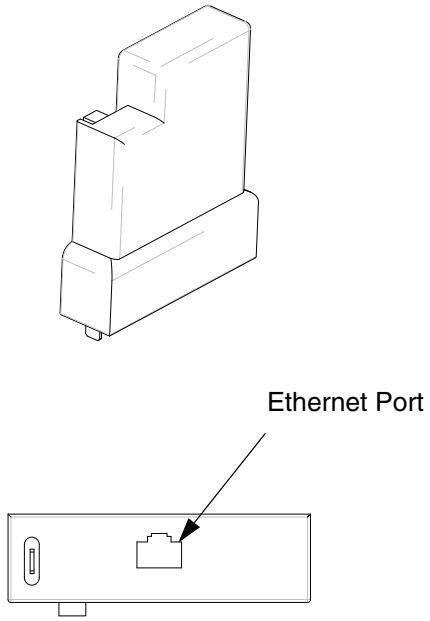

FIG. 13. Ethernet Interface Module

Local Control Box (optional accessory)

See FIG. 1 on page 9, and FIG. 14. Install the local control box (C) in the hazardous area as close to pump as possible.

See FIG. 2 on page 10 to wire the local control box to the VFD. All cabling in the hazardous area must be in explosion-proof conduit and secured by explosion-proof seal fittings. See **Hazardous Area Cabling and Conduit Requirements (Explosion Proof)**, page 13 and TABLE 2.

Local Control Box has a conduit connection point on top and bottom for installation convenience.

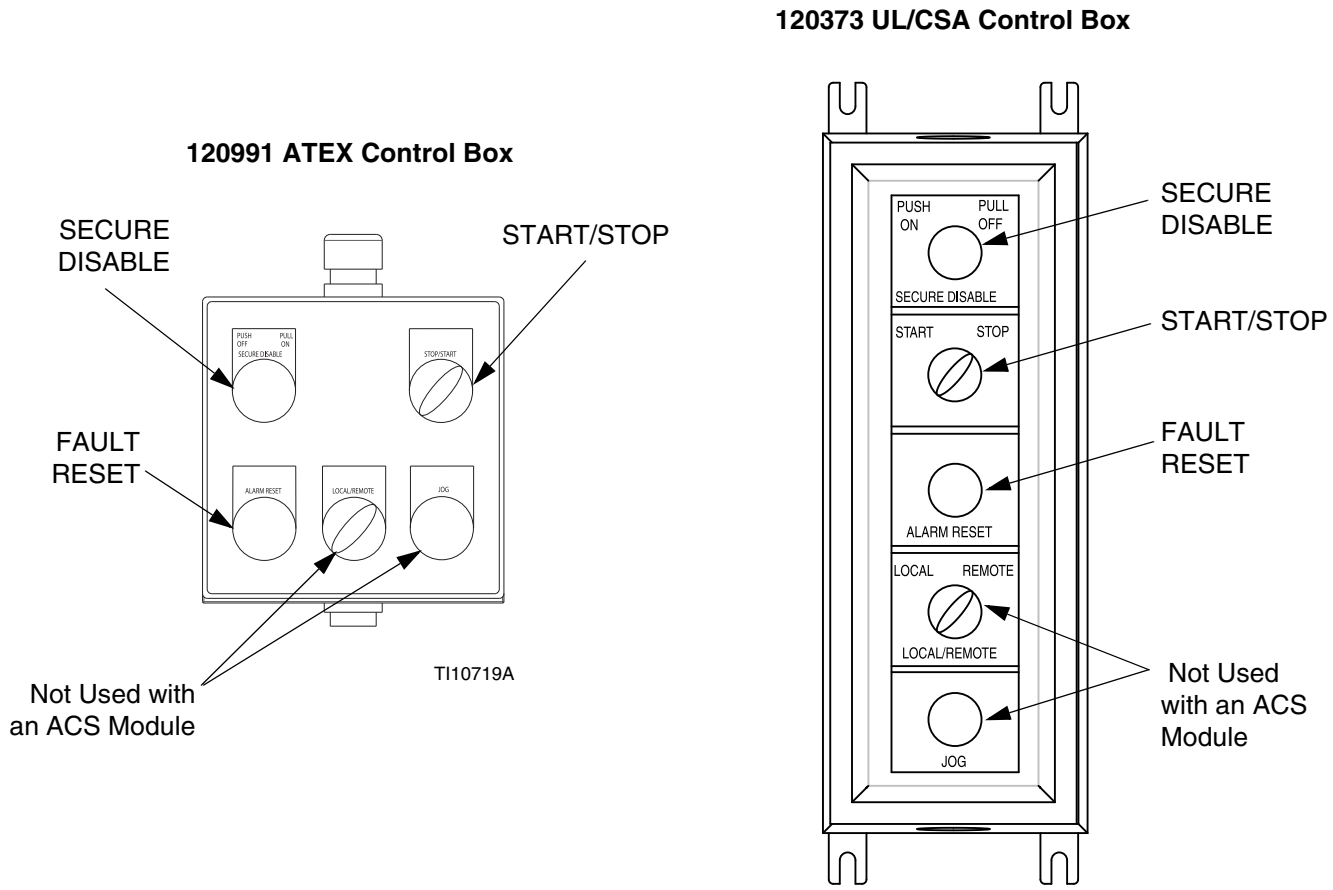

FIG. 14. Local Control Box

Pneumatic Back Pressure Regulator (optional)

See FIG. 1 on page 9, and FIG. 15. Install the back pressure regulator (U) in the fluid return line in the hazardous area. Three sizes of fluid inlets and outlets (FI, FO) are available. See TABLE 7.

Table 7: Back Pressure Regulator Fluid Inlet and Outlet Sizes

BPR	Fluid Inlet and Outlet Size
288117	1-1/4 npt(f)
288262	2 in. sanitary
288311	1-1/2 npt(f)

To control air pressure to the BPR, install Kit 15K012 (H) in the non-hazardous area. The kit includes two air regulators and a 3-way solenoid valve. Connect an electrically conductive air hose to the 5/32 in. tube fitting (AF) on the BPR.

See FIG. 2 on page 10 to wire the 3-way solenoid valve to pin 26 and common pin of the VFD.

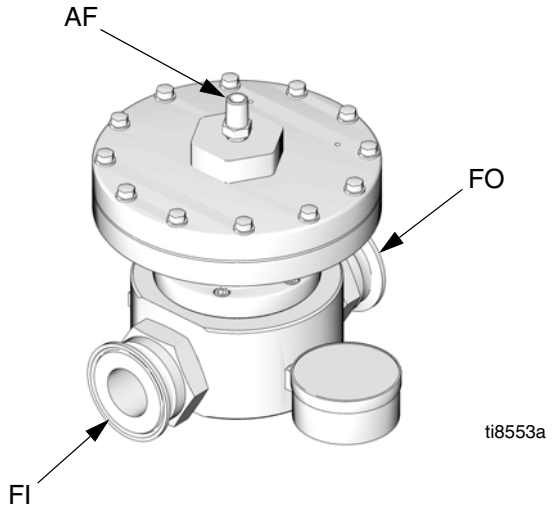

FIG. 15. Back Pressure Regulator

Dimensions

E-Flo Electric Circulation Pump (see key below)

Enclosed and Open Wetcup Lower

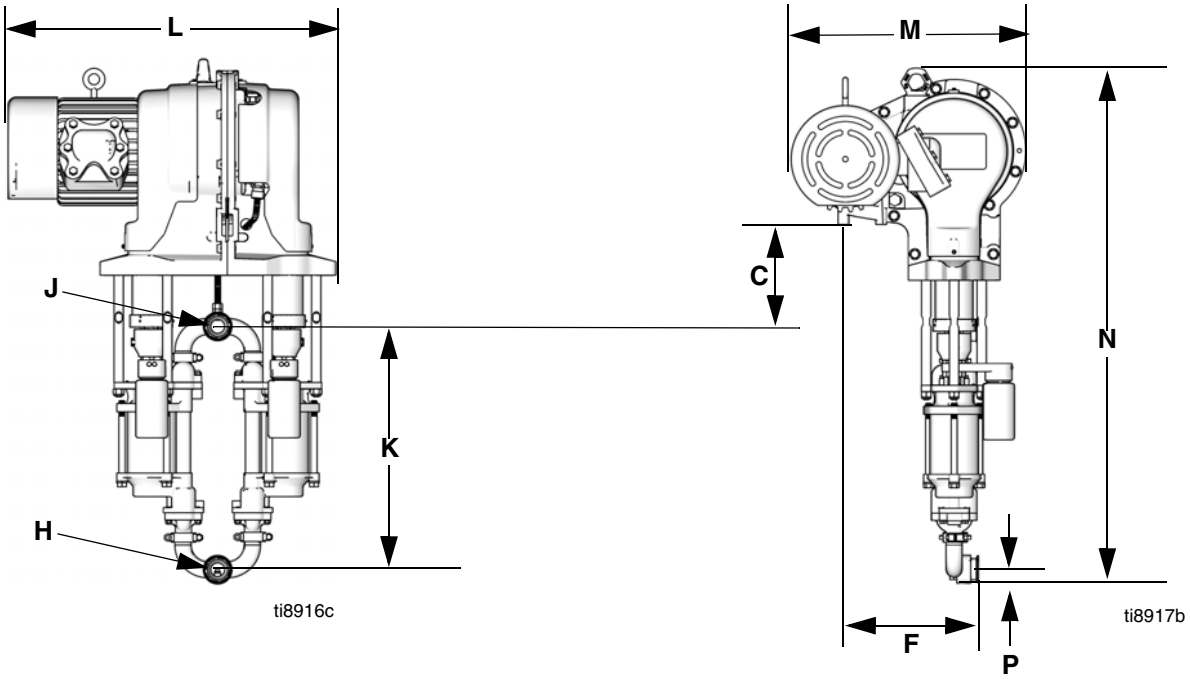

Key:

Ref.	Description	in. (mm)
C	Height from center of fluid outlet to lower mounting holes	9.50 (241.3)
F	Depth from outermost lower mounting hole to face of fluid inlet/outlet ports	12.549 (318.7)
H	Sanitary Fluid Inlet	2 in. (f)
J	Sanitary Fluid Outlet	2 in. (f)
K	Distance from center of fluid inlet to center of fluid outlet	22.4 (569)
L	Pump Width	29.6 (752)
M	Depth of pump	21.6 (549)
N	Height of pump	48.1 (1222)
P	Distance from center of fluid inlet to bottom of pump	1.625 (41.3)

E-Flo Electric Circulation Pump (see key below)

Sealed (Bellows) Lower

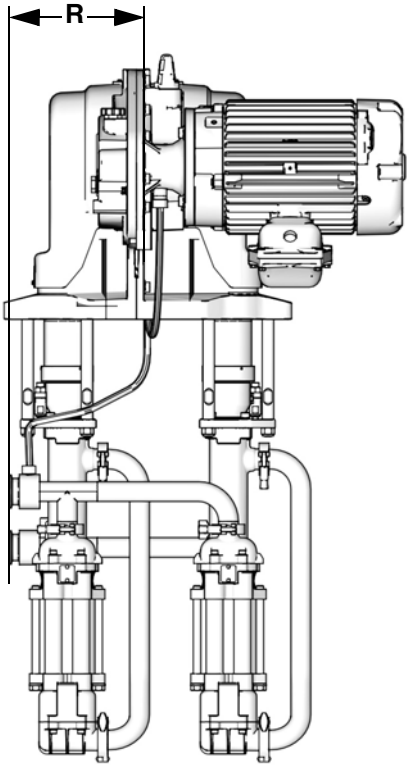

ti31107a

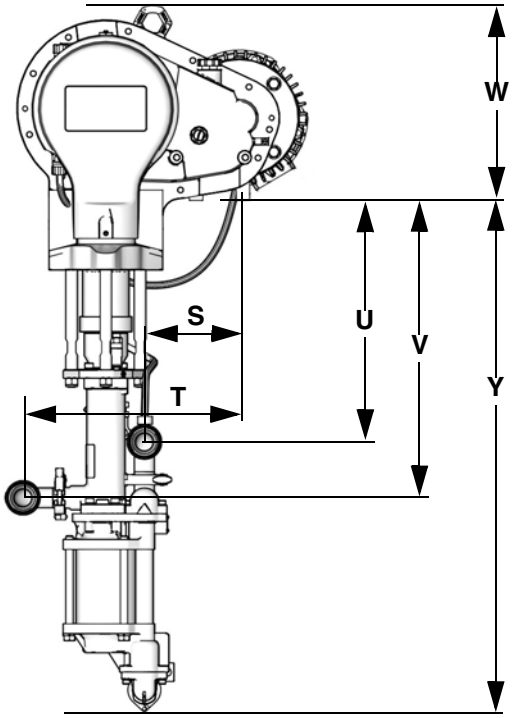

ti31108a

Key:

Ref.	Description	in. (mm)
R	Horizontal distance from lower mounting bolt to inlet/outlet	10.1 (256.6)
S	Horizontal distance from rear lower mounting bolt to outlet	7.4 (189)
T	Horizontal distance from rear lower mounting bolt to inlet	16.5 (419)
U	Vertical distance from lower mounting bolt to outlet	18.1 (460)
V	Vertical distance from lower mounting bolt to inlet	22.3 (566)
W	Vertical distance from lower mounting bolt to top of pump	14.6 (371)
Y	Vertical distance from lower mounting bolt to bottom of pump	38.3 (973)

Mounting Hole Details (see key below)

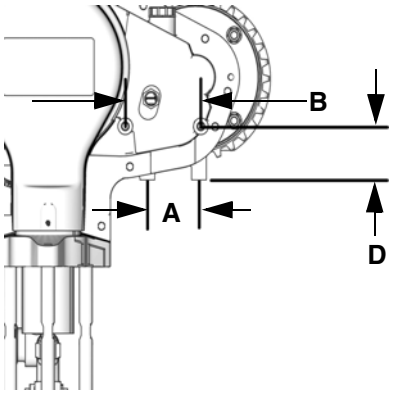

ti9419a

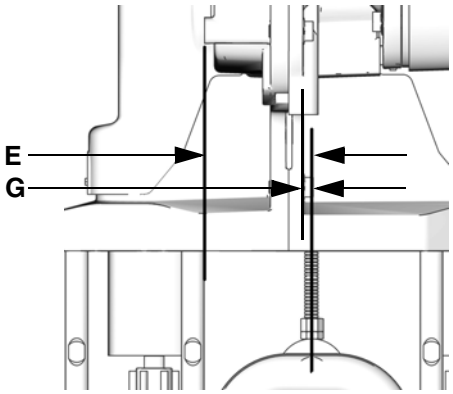

ti9420a

Key:

Ref.	Description	in. (mm)
A	Width between lower mounting holes	3.5 (88.9)
B	Width between upper mounting holes	5.125 (130.2)
D	Height between lower and upper mounting holes	3.22 (81.8)
E	Depth from upper mounting hole surface to center of fluid outlet	4.07 (103.4)
G	Width from centerline of lower mounting holes to centerline of fluid outlet	0.23 (5.8)

Pump Stand (Option)

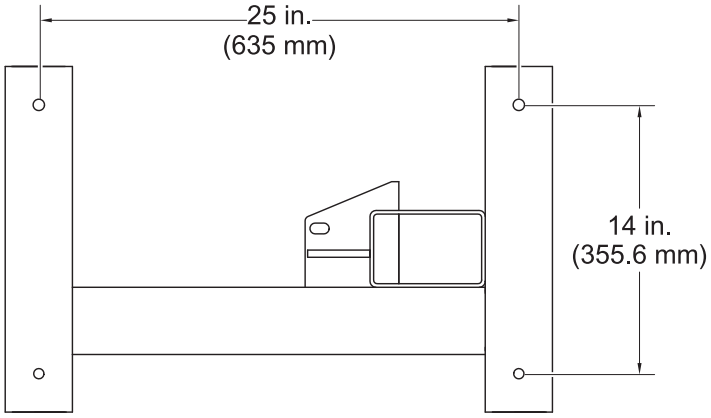

ti28234a

Technical Data

Maximum Working Pressure	*E-Flo 1500:* 425 psi (2.93 MPa, 29.3 bar) *E-Flo 2000:* 460 psi (3.22 MPa, 32.2 bar) *E-Flo 3000:* 330 psi (2.31 MPa, 23.1 bar) *E-Flo 4000:* 250 psi (1.75 MPa, 17.5 bar)
Maximum Fluid Temperature	150°F (66°C)
Electrical Requirements	*European Models:* 230/400 Vac, 3 phase, 20 A/15 A *North American Models:* 230/460 Vac, 3 phase, 20 A/15 A
Ambient Temperature Range	32-104°F (0-40°C)
Maximum Fluid Output	See charts on page 27.
Fluid Inlet and Outlet Size	2 in. Tri-clamp
Gear Reducer Oil Capacity	2 quarts (1.9 liters)
Required Gear Reducer Lubricant	ISO VG220 grade oil (Graco Part No. 288414)
Weight (with motor and 2000 cc lowers)	*Pump:* 550 lb (249 kg)
Wetted Parts	*Lower:* see manual 3A0539 300 Series SST, CV-75, 17-4 PH SST, PTFE
Electric Motor	*E-Flo 1500:* 3 HP, 1800 rpm (60 Hz) or 1500 rpm (50 Hz), NEMA 182 TC Frame *E-Flo 2000/3000/4000:* 5 HP, 1800 rpm (60 Hz) or 1500 rpm (50 Hz), NEMA 184 TC Frame
Maximum Production Motor Speed	1500 rpm (50 Hz) 1800 rpm (60 Hz)
Maximum Motor Torque	*E-Flo 1500:* 9.1 ft-lb (12.3 N•m) *E-Flo 2000/3000/4000:* 15 ft-lb (20.3 N•m)
Gear Reduction Ratio	75.16:1

NOTE: All brand names or marks are used for identification purposes and are the trademarks of their respective owners.

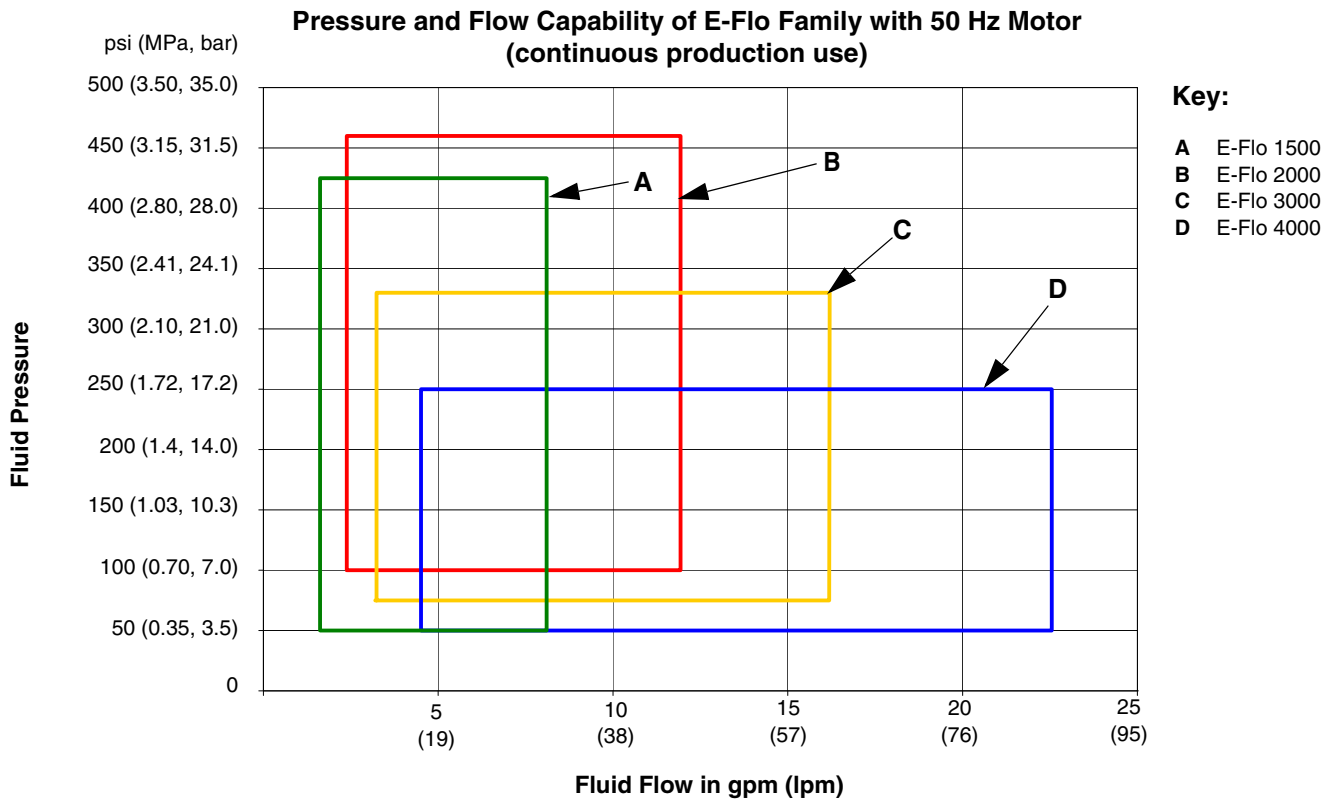
Pressure and Flow Capability of E-Flo Family with 50 Hz Motor
(continuous production use)
psi (MPa, bar)
500 (3.50, 35.0)
450 (3.15, 31.5)
400 (2.80, 28.0)
350 (2.41, 24.1)
300 (2.10, 21.0)
250 (1.72, 17.2)
200 (1.4, 14.0)
150 (1.03, 10.3)
100 (0.70, 7.0)
50 (0.35, 3.5)
0
Fluid Pressure
5 (19)
10 (38)
15 (57)
20 (76)
25 (95)
Fluid Flow in gpm (lpm)
A
B
C
D
Key:
A E-Flo 1500
B E-Flo 2000
C E-Flo 3000
D E-Flo 4000

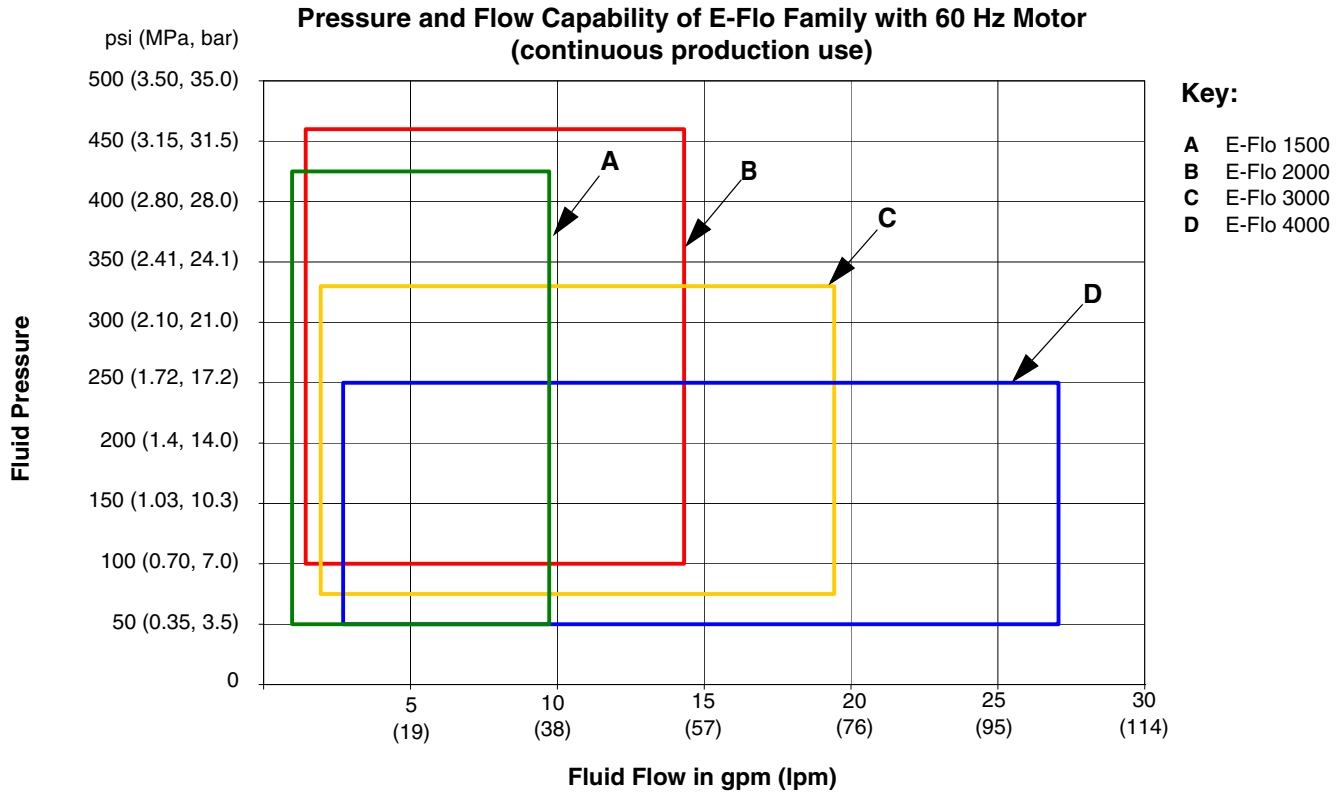
Pressure and Flow Capability of E-Flo Family with 60 Hz Motor
(continuous production use)
psi (MPa, bar)
500 (3.50, 35.0)
450 (3.15, 31.5)
400 (2.80, 28.0)
350 (2.41, 24.1)
300 (2.10, 21.0)
250 (1.72, 17.2)
200 (1.4, 14.0)
150 (1.03, 10.3)
100 (0.70, 7.0)
50 (0.35, 3.5)
0
Fluid Pressure
5 (19)
10 (38)
15 (57)
20 (76)
25 (95)
30 (114)
Fluid Flow in gpm (lpm)
A
B
C
D
Key:
A E-Flo 1500
B E-Flo 2000
C E-Flo 3000
D E-Flo 4000

Graco Standard Warranty

Graco warrants all equipment referenced in this document which is manufactured by Graco and bearing its name to be free from defects in material and workmanship on the date of sale to the original purchaser for use. With the exception of any special, extended, or limited warranty published by Graco, Graco will, for a period of twelve months from the date of sale, repair or replace any part of the equipment determined by Graco to be defective. This warranty applies only when the equipment is installed, operated and maintained in accordance with Graco's written recommendations.

This warranty does not cover, and Graco shall not be liable for general wear and tear, or any malfunction, damage or wear caused by faulty installation, misapplication, abrasion, corrosion, inadequate or improper maintenance, negligence, accident, tampering, or substitution of non-Graco component parts. Nor shall Graco be liable for malfunction, damage or wear caused by the incompatibility of Graco equipment with structures, accessories, equipment or materials not supplied by Graco, or the improper design, manufacture, installation, operation or maintenance of structures, accessories, equipment or materials not supplied by Graco.

This warranty is conditioned upon the prepaid return of the equipment claimed to be defective to an authorized Graco distributor for verification of the claimed defect. If the claimed defect is verified, Graco will repair or replace free of charge any defective parts. The equipment will be returned to the original purchaser transportation prepaid. If inspection of the equipment does not disclose any defect in material or workmanship, repairs will be made at a reasonable charge, which charges may include the costs of parts, labor, and transportation.

THIS WARRANTY IS EXCLUSIVE, AND IS IN LIEU OF ANY OTHER WARRANTIES, EXPRESS OR IMPLIED, INCLUDING BUT NOT LIMITED TO WARRANTY OF MERCHANTABILITY OR WARRANTY OF FITNESS FOR A PARTICULAR PURPOSE.

Graco's sole obligation and buyer's sole remedy for any breach of warranty shall be as set forth above. The buyer agrees that no other remedy (including, but not limited to, incidental or consequential damages for lost profits, lost sales, injury to person or property, or any other incidental or consequential loss) shall be available. Any action for breach of warranty must be brought within two (2) years of the date of sale.

GRACO MAKES NO WARRANTY, AND DISCLAIMS ALL IMPLIED WARRANTIES OF MERCHANTABILITY AND FITNESS FOR A PARTICULAR PURPOSE, IN CONNECTION WITH ACCESSORIES, EQUIPMENT, MATERIALS OR COMPONENTS SOLD BUT NOT MANUFACTURED BY GRACO. These items sold, but not manufactured by Graco (such as electric motors, switches, hose, etc.), are subject to the warranty, if any, of their manufacturer. Graco will provide purchaser with reasonable assistance in making any claim for breach of these warranties.

In no event will Graco be liable for indirect, incidental, special or consequential damages resulting from Graco supplying equipment hereunder, or the furnishing, performance, or use of any products or other goods sold hereto, whether due to a breach of contract, breach of warranty, the negligence of Graco, or otherwise.

FOR GRACO CANADA CUSTOMERS
The Parties acknowledge that they have required that the present document, as well as all documents, notices and legal proceedings entered into, given or instituted pursuant hereto or relating directly or indirectly hereto, be drawn up in English. Les parties reconnaissent avoir convenu que la rédaction du présente document sera en Anglais, ainsi que tous documents, avis et procédures judiciaires exécutés, donnés ou intentés, à la suite de ou en rapport, directement ou indirectement, avec les procédures concernées.

Graco Information

For the latest information about Graco products, visit www.graco.com.

For patent information, see www.graco.com/patents.

TO PLACE AN ORDER, contact your Graco distributor or call to identify the nearest distributor.
Phone: 612-623-6921 **or Toll Free:** 1-800-328-0211 **Fax:** 612-378-3505

All written and visual data contained in this document reflects the latest product information available at the time of publication. Graco reserves the right to make changes at any time without notice.

Original instructions. This manual contains English. MM 311592

Graco Headquarters: Minneapolis
International Offices: Belgium, China, Japan, Korea

GRACO INC. AND SUBSIDIARIES • P.O. BOX 1441 • MINNEAPOLIS MN 55440-1441 • USA

www.graco.com
Revision Z, June 2018